THE OFFICIAL PUBLICATION OF THE PUBLIC WORKS ASSOCIATION OF BRITISH COLUMBIA, THE ALBERTA PUBLIC WORKS ASSOCIATION, THE SASKATCHEWAN PUBLIC WORKS ASSOCIATION, THE MANITOBA PUBLIC WORKS ASSOCIATION, AND THE ALBERTA MUNICIPAL SUPERVISORS ASSOCIATION

THE ROADRUNNER

WINTER 2013-2014

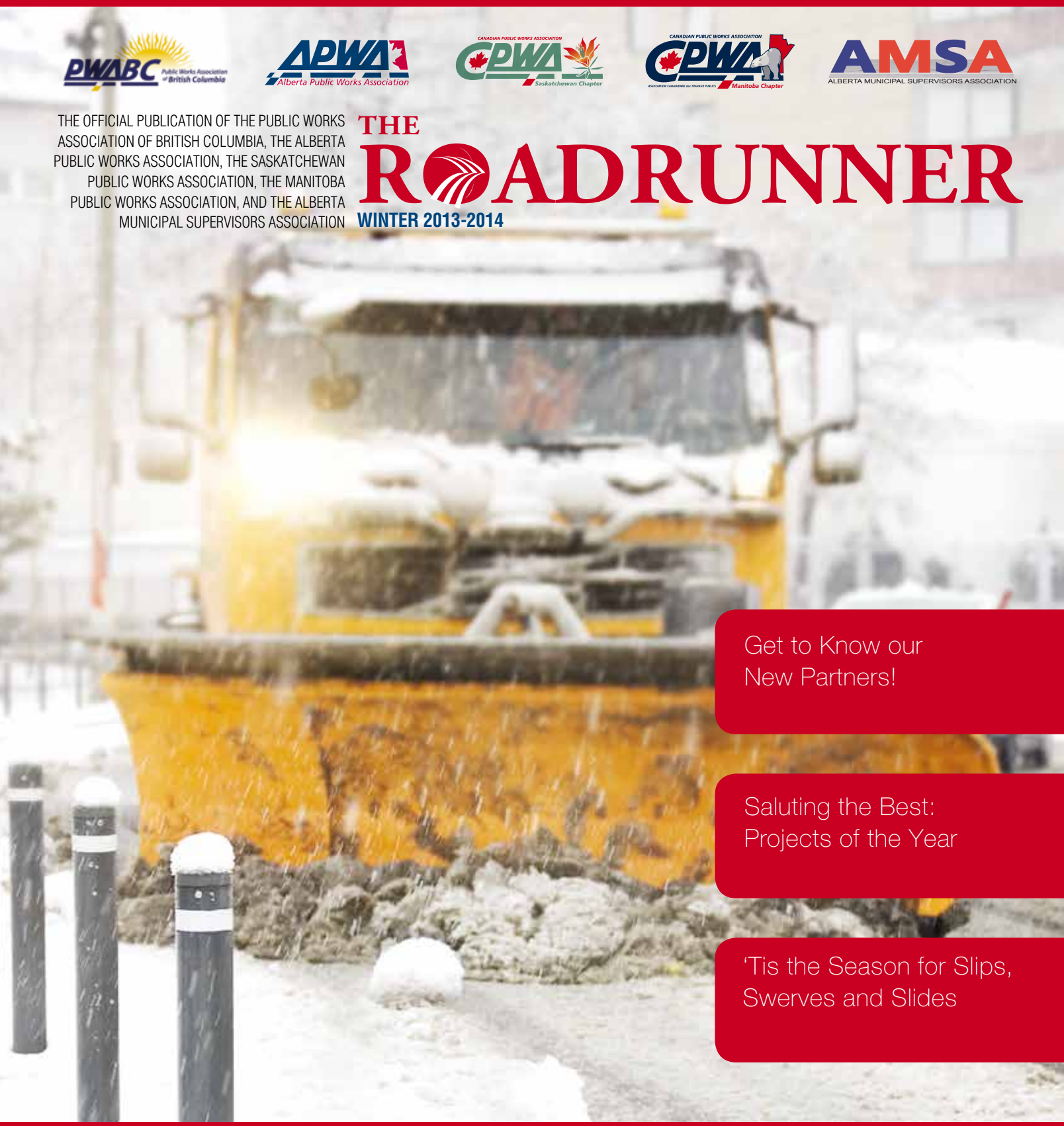

Get to Know our New Partners!

Saluting the Best: Projects of the Year

'Tis the Season for Slips, Swerves and Slides

FIND OUT WHAT'S HAPPENING ONLINE

Canada Post Mail Publications Agreement Number: 40609661

Construction Solutions

Everything you need for your next project

mvs mountainview systems

General Construction and Layout Tools

Lasers and tools that can stand up to any tough job site!

Laser Levels

LL500

Horizontal / Vertical Lasers

HV401

PLS180

Portable Tools

HD50

Total Stations

Steel & Aluminum Trench Boxes / Slide Rail Systems

Commercial Weighing Systems

Associated Supplies

A large selection of supplies to suit your needs

Stringline, plumb bobs, line locators, safety equipment, dectectors, rods & poles, transmitters, concrete stakes & clamps, joint testers, test plugs, low pressure sewer testing equipment, manhole tripods, lath, paint, flagging and much more.

For these or more of our products and services, please call us!

"using technology to change the way work is done"

mvs mountainview systems

CONTACT US

SASKATOON
3403 Millar Avenue
Bay 3, Saskatoon, SK
S7K 6J4
306-978-8500

CALGARY
3458 - 48th Ave SE
Calgary, AB
T2B 3L6
403-248-8500

EDMONTON
16935 - 111th Ave
Edmonton, AB
T5M 2S4
780-483-0920

SURREY
#115, 19358 - 96th Ave
Surrey, BC
V4N 4C1
604-513-5878

1-877-244-5434
www.mvs.ca
info2008@mvs.ca

Protect your roads from water damage with Redicote®

Protect your roads from water damage and aggregate loss with AkzoNobel adhesion promoters also known as anti-stripping agents, wetting agents, anti-strips, LAS or adhesion promotion agents.

Adhesion promoters provide:

- **Active Adhesion** – Coating, formation and retention of strong chemical bond between aggregate and bitumen in the presence of water.
- **Passive Adhesion** – The process of forming and maintaining a strong chemical bond between bitumen and a dry aggregate surface.

To prevent aggregate loss from asphalt pavements or stripping in Western Canada, road authorities often request the addition of liquid anti-stripping agents such as AkzoNobel Redicote® products. Redicote® C-2914 is the favoured product for ease of handling and performance. Other products such as Redicote® AP-1, Redicote® 82S or Redicote® E-6 are also available to test in your mix designs.

For more information about our adhesion promoters or our warm mix and asphalt emulsion additives please contact:

Mark Podwysocki
1 403-461-7782
mark.podwysocki@akzonobel.com

AkzoNobel
Tomorrow's Answers Today

EQUIPMMENT RENTALS
Infrared Asphalt Restoration Equipment

SMART FIX
ASPHALT INFRARED REPAIR LEASING & RENTALS

YOU DO IT...

Take a greener approach;
why replace it when
you can restore it

Our quality constructed equipment is designed for easy and efficient operation.

- Saving time & money
- Quality repairs
- Year round production
- Reduce your carbon footprint

Smart Fix Asphalt can and will accomplish these objectives. We will take you from the traditional patching approach to a more permanent, thermo-bonded restoration approach, with only a crew of two.

RECYCLE THAT ASPHALT and spend your time working, not waiting in line at the asphalt plant. You can have two, four, or eight tons of asphalt at your fingertips, heated and ready to go any time of the year.

REPAIR SERVICES
Infrared Asphalt Restoration Equipment

visit us online
smartfixasphalt.ca

WE DO IT...

SmartFix is the leader
in infrared asphalt restoration,
speacializing in manhole
and catch-basin repairs

PROFESSIONAL REPAIR SERVICES INCLUDE:

- 24hr Emerergency Services
- Specializing in Manhole & Drain Repairs
- Lowering & Raising Manholes / Catch-Basins
- Repair Potholes, Utility Cutouts & Birdbaths
- Level out Heaves & Dips
- Thermo-Bond "Cold Joints" & Seams
- Repair Cracks & Asphalt Separations
- Bridge Decks & Ramps
- Airport Runways

1.855.762.7831

PWABC Public Works Association of British Columbia

APWA

Published For:
The Public Works Association of British Columbia
PO Box 1456, Stn. Main
Kamloops, BC V2C 6L7
Phone: (250) 819-6290 • Fax: (888) 812-7014
http://pwabc.cpwa.net/contact.html
Editorial Advisor: Jeannette Austin
Tel: (250) 819-6290

The Alberta Public Works Association
3407, 5605 Henwood Street SW
Calgary, AB T3E 7R2
Phone: (403) 990-APWA • Fax: (403) 398-0665
www.publicworks.ca
Editorial Advisor: Stacy Byer
Tel: (403) 990-2792

Canadian Public Works Association, Saskatchewan Chapter
http://saskatchewan.cpwa.net

Canadian Public Works Association, Manitoba Chapter
http://manitoba.cpwa.net

Alberta Municipal Supervisors' Association
www.amsapw.ca

Published By:
Matrix Group Publishing Inc.
Publications Agreement Number: 40609661
Return undeliverable Canadian addresses to:
309 Youville Street
Winnipeg, MB R2H 2S9
Toll Free: (866) 999-1299
Toll Free Fax: (866) 244-2544
www.matrixgroupinc.net

President & CEO:
Jack Andress

Chief Operating Officer:
Jessica Potter
jpotter@matrixgroupinc.net

Publishers:
Peter Schulz, Joe Strazzullo

Editor-in-Chief:
Shannon Savory
ssavory@matrixgroupinc.net

Editor:
Alexandra Walld
awalld@matrixgroupinc.net

Accounting/Administration:
Shoshana Weinberg, Pat Andress, Nathan Redekop, Lloyd Weinberg
accounting@matrixgroupinc.net

Director or Marketing & Distribution:
Shoshana Weinburg

Sales Manager:
Neil Gottfred

Matrix Group Inc. Account Executives:
Angelica Whyte, Bill Burges, Bonnie Petrovsky, Brian MacIntyre, Catherine Motley, Chris Smith, Colleen Bell, Crystal Burke, David Roddie, Denise Lavergne, Frank Kenyeres, Frank McLean, Heidi Hand, Jeff Cash, Jim Hamilton, John Price, Matthew Paxton, Miles Meagher, Rick Kuzie, Rob Allan, Rob Choi, Steve Gaebel, Tammy Miller

Layout & Design:
Cody Chomiak

Advertising Design:
James Robinson

©2013-2014 Matrix Group Publishing Inc. All rights reserved. Contents may not be reproduced by any means, in whole or in part, without the prior written consent of the publisher. Opinions expressed in this publication are not necessarily those of Matrix Group Publishing Inc.

The Public Works Association of British Columbia (PWABC) and the Alberta Public Works Association (APWA) are pleased to announce a few new additions to our magazine. We are looking forward to working with the Canadian Public Works Association's Saskatchewan and Manitoba chapters, and the Alberta Municipal Supervisors' Association. These recent additions solidify our passion for the industry and our desire to work together to enhance member value. We look forward to having our new partners on board!

Up Front

9 A Message from the Public Works Association of British Columbia

13 A Message from the Alberta Public Works Association

15 A Message from the Canadian Public Works Association, Saskatchewan Chapter

15 A Message from the Canadian Public Works Association, Manitoba Chapter

16 A Message from the Alberta Municipal Supervisors' Association

In Every Issue

18 Legal Brief: - Water, Wastewater and Recycling…Oh My!

25-29 What's New?

32 Legal Brief: Tis the Season for Slips, Swerves and Slides

36 Community Highlights: Smiley Face Bollards Designed in Vancouver Eliminate Many Common Problems

Features

38 Saluting the Best: Projects of the Year

48 Alberta Public Works Association Lends Assistance to Southern Alberta Flood Relief

50 Buyer's Guide

WALLWORKS ACOUSTIC ARCHITECTURAL PRODUCTS Inc.

Manufacturer of LEED-Compliant Sound Control Systems

Fabri-Lok® ceiling & wall panels

We offer the following Acoustic and Decorative Solutions for Commercial and Residential applications:

FABRI-LOK® Stretch Fabric Systems, Panels, Baffles
BARRISOL® Ceiling System
Tavapan / Woodtrends / Rulon Acoustic Wood Products
ShimmerScreen® Bead Chain Curtains
Daisycake® Art Chain Screens
Transformit® Tensioned Fabric Structures
Acoustiblok® Sound Blocking & Absorbing Technology
Window Treatment: Solar Shades and Blinds
Architectural and Engineered Wood: Glulam and Acoustic Wood Products

Barrisol® multi-coloured stretch vinyl ceiling panels

Acoustic Wood Panels

Phone: 403.255.3550 Fax: 403.686.2592 Toll free:1.877.829.2550
Email: info@wallworks.com Website: www.wallworks.com

WE DO IT ALL

CORROSION PROTECTION & SEALING SYSTEMS YOU CAN DEPEND ON

Extend Structure Life,
Reduce Maintenance & Repair Costs

- for industrial steelwork, pipework & road surfaces
- above & below ground pipe, valves, fittings & steel
- offshore marine piling protection
- road, bridge, airport & ashpalt applications

A member of Winn & Coales International.

Denso

www.densona.com

Toronto • Edmonton

Denso North America Inc.

90 Ironside Cres. Unit 12 Toronto, ON M1X 1M3

Tel: 416.291.3435 Fax: 416.291.0898

RockHound

BrushHound

RockHound Attachments

2507 Tully Road PO Box 220

Hughson, California USA 95326

tel **800 426-5615** fax **209 882-9001**

rockhound.com

BC Road Builders' members have the expertise to do your road building and heavy construction jobs on time and on budget with no risk to you – hire a BC Road Builder to do the job!

Did you know that the BC Road Builders issues a weekly tender summary to all members, which includes municipal, provincial, territorial and federal government contract bids? For free distribution of your civil construction tender information, please send your bids to **info@roadbuilders.bc.ca**.

B.C. Road Builders & Heavy Construction Association

BC Road Builders & Heavy Construction Association

www.roadbuilders.bc.ca

When you're finished with your business.....
We're just getting started

ZOELLER
PUMP COMPANY
Zoeller Family of Water Solutions

INFILTRATOR
SYSTEMS INC

SJE-Rhombus
CONTROLS

westcon
precast inc.

WILO
Pumpen Intelligenz.

NAYADIC

Franklin Electric

Frontier
Waterworks & Pump Supply
Edmonton Calgary Red Deer Lethbridge
Saskatoon Regina
A Division of JBW Pipe & Supply

100% Canadian
Owned

Edmonton	Calgary	Lethbridge	Red Deer	Saskatoon	Regina
780-643-8787	888-243-0233	877-327-0933	866-667-6607	877-653-3040	855-775-3040

A Message from the Public Works Association of British Columbia

I urge all members to spread the word to neighbouring communities, peers, suppliers and consultants on the benefits of becoming a member of PWABC, and especially to the students and young professionals.

It has been another fantastic year for the Public Works Association of British Columbia (PWABC) and I am proud to be the president of such a great organization. The foundation for our chapter's future has been achieved through the hard work and dedication of our past president, board members, committee members and executive director.

I want to take this opportunity to thank David Sparanese, President (2011-2013), for his dynamic leadership and contribution to the PWABC chapter. I also want to thank the Board of Directors for volunteering their time and dedication to the chapter. I am so grateful that many of them are continuing to serve on the board and would like to welcome our newest board members, Derek Anderson and Karen Stewart.

A special thank you to Jeannette Austin, Executive Director, for all her hard work and tireless hours. She keeps our organization moving ahead. I look forward to working with our new board and committee members to further the great work done to make the PWABC a valuable resource for all our Members.

Our board met November 2013 for a strategic planning session and for 2014, we will continue to focus on education, membership growth and improving our annual technical conference. These areas are vitally important to ensure we maintain our efforts in promoting public works as a profession.

The quality education that is offered through the chapter include education programs in supervisory, leadership, operator training, and certified programs such as the Public Works Inspectors. We are continuing to explore courses related to streets, fleet and parks operations, which will provide a broader stream of subject matters. Continued relationships with organizations, such as the British Columbia Parks and Public Works

PWABC Executive

PRESIDENT
Deryk Lee
Water & Underground Utilities / City of Victoria
417 Garbally Road
Victoria, BC V8T 2J9
P: 250-361-0467
E: dlee@victoria.ca

VICE PRESIDENT
Doug Allin
Chief Administrative Officer / City of Grand Forks
Box 220
7217 4th Street
Grand Forks, BCV0H 1H0
P: 250-442-8266
E: dallin@grandforks.ca

PAST PRESIDENT
David Sparanese, AScT, CPWI 3
Manager Street Operations / District of Saanich
1040 Mckenzie Avenue
Victoria, BC V8P 2L4
P: 250-475-5599 ext. 3324
E: david.sparanese@saanich.ca

TREASURER
Greg Wightman
Utilities Superintendent / Corporation of Delta
5404 64 Street
Delta, BC V4K 1Z2
P: 604-861-1702
E: gwightman@delta.ca

SECRETARY
Pat Miller
Director, Utility Services / Sun Peaks Utilities Co. Ltd
1280 Alpine Road
Sun Peaks, BC V0E 5N0
P: 250-578-5490
E: pmiller@sunpeaksresort.com

DIRECTOR
Doug Regehr
Sewer and Drainage Superintendent / City of Coquitlam
500 Mariner Way
Coquitlam, BC V3K 7B6
P: 604-927-6215
E: dregehr@coquitlam.ca

DIRECTOR
Derrick Anderson
Trades Manager / City of Cranbrook
40-10th Avenue South
Cranbrook, BC V1C 2M8
P: 250-489-0218
E: anderson@cranbrook.ca

DIRECTOR
Karen Stewart
Industry Manager, Municipal Solutions, Business Development / Esri Canada
1130 West Pender Street, Suite 610
Vancouver, BC V6W 4A4
P: 604-695-7403
E: kstewart@esri.ca

DIRECTOR
Murray Steer, CPWI 1
Manager, Equipment Services / City of Vancouver
250 W 70th Avenue
Vancouver, BC V5X 2X1
P: 604-326-4791
E: murray.steer@vancouver.ca

DIRECTOR
Chris Dodd
Superintendent III- Transfer & Landfill Operations / City of Vancouver
701 National Avenue
Vancouver BC V6A 4L3
P: 604-940-3192
E: chris.dodd@vancouver.ca

APWA/CPWA DELEGATE
David Sparanese, AScT, SPWI 3
Manager Street Operations / District of Saanich
1040 Mckenzie Avenue
Victoria, BC V8P 2L4
P: 250-475-5599 ext. 3324
E: david.sparanese@saanich.ca

EXECUTIVE DIRECTOR
Jeannette Austin
P: 250-819-6290
E: pwabcoffice@gmail.com

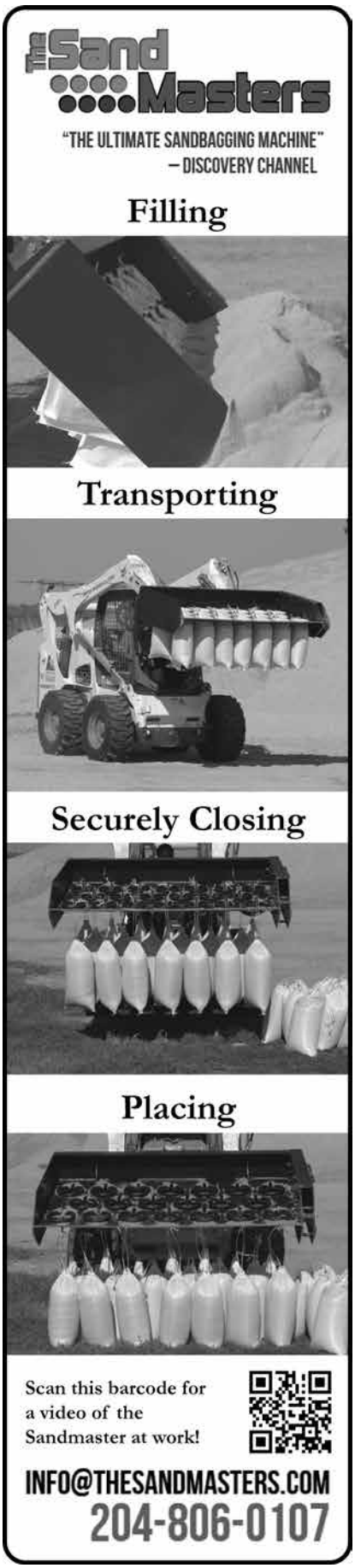

Group (PPWG), Applied Science Technologists & Technicians of BC (ASTT) and the First Nations groups, while fostering relationships with others, will allow the PWABC to expand. For further details, please refer to the updated PWABC website.

I urge all members to spread the word to neighbouring communities, peers, suppliers and consultants on the benefits of becoming a member of PWABC, and especially to the students and young professionals. They are the future of public works and it is our duty to have them engaged in activities that showcase the diversity of the public works profession to enable future career options.

The continued support for the annual National Public Works Week has benefited many communities by showcasing our profession. This year's event will be held from May 18-24, 2014. I am encouraging all members to become involved by attending these types of events, volunteering to help with activities or joining one of our many committees. There are three new committees formed to coordinate special functions, communications and nominations. The chairperson for each committee will be contacting members to get involved.

The 81st PWABC Annual Technical Conference (2013) was a major success. I want to thank the City of Nanaimo for hosting the conference and a special thank you goes to Steven Ricketts' team for making it a memorable event. The two day conference format proved to be overwhelmingly accepted as indicated by the post conference attendees' survey. We will continue with the new format and expand on the technical papers to include fleet, parks and other related subjects to public works.

The annual conference provides opportunities to network with peers, suppliers and consultants, and attend educational programs, operator training and technical presentation sessions. It is also a time to relax and enjoy. I look forward to meeting you at our 2014 PWABC Annual Technical Conference in Kamloops, BC, September 15-17, 2014.

As advocates for the Public Works profession, I am very proud of who we are. Together we can continue to make the PWABC a great resource for all our members.

I thank you for the opportunity to lead the way. Wishing you good health and happiness for 2014.

Deryk Lee
President
Public Works Association of BC

Farewell Message from David Sparanese

It has been an honour and a privilege to represent and serve on the Public Works Association of British Columbia (PWABC) as President for the past two years. I am proud of our recent accomplishments, relationships that we have built and the long-term direction that the Board of Directors have mapped out for the association. Thank you for entrusting me in my new roll as CPWA and APWA Delegate on the board. I look forward to the new challenges that this position brings and to continuing to serve on this board.

I would like you to join me in welcoming our incoming President, Deryk Lee and our newly elected Directors. It is the passion of public works that we all have that makes this association successful. Deryk, you will continue to have all our support moving forward in your term.

Finally, I would like to thank all my board members, as well as Jeannette Austin for her ongoing support and friendship over the years, and the District of Saanich for their continued support of my involvement in the PWABC.

This is a great association to be involved with and I encourage others to become more active members.

David Sparanese, AScT, CPWI 3
Past President

INDUSTRIAL MACHINE INC. www.industrialmachine.ca

11920 - 145 Street, Edmonton, Alberta T5L 2H5 Phone: (780) 944-6986 Fax: (780) 452-3781

Your Municipal Equipment Specialists

R.P.M.
- Snow Removal Equipment
- Snow Blowers
- Utility Vehicles

K.M INTERNATIONAL
- T-2 ASPHALT RECYCLER
- KM4000T
- KM8000T
- Infrared Recylcers

BOSS
- Snow Plows

ROAD HOG
- Cold Planers
- Road Saws

HI-WAY
- Salt and Sand Spreaders
- Snow Plows
- Multi-purpose Dump Bodies

CRAFCO
- Pavement Preservation Products
- Spray Injection Patchers

ZAMBONI
- Ice Recurfacers: Natural Gas, Propane and Electric
- Ice Edgers (gas/electric)
- Conti Blade Changing systems

Product lines may vary from province to province.

HYDRAULICS I CONTROLS I REPORTING

Effective winter maintenance solutions

STAY AHEAD OF THE STORM

Optimize spreading. Improve reliability. Save money.

- SpreadSmart Rx™ precision spreader controls
- Adaptable proportional plow controls
- Powerful hydraulic systems
- GPS DataSmart™ reports and maps with GPS/AVL

See GPS DataSmart maps and reports at www.ciruscontrols.com/datasmart

Cirus CONTROLS

Headquarters:
Minneapolis, Minnesota
763.493.9380
www.ciruscontrols.com

Canada Region:
Rick Fisher
443.831.2358
rfisher@ciruscontrols.com

© 2013 Cirus Controls

We've supercharged the Cat 12 Motor Grader. With more power and productivity the 12M2 features a longer wheelbase, large displacement Cat 9.3 ACERT engine and a new All-Wheel Drive option. Like all Cat motor graders, the 12M2 offers outstanding operator comfort and visibility, along with integrated Cat Grade Control Cross Slope technology.

For more information about the new Cat 12M2, **call your local Finning sales rep today.**

Empowering your success

1-888-finning (346-6464) | finning.ca

FINNING CAT

A Message from the Alberta Public Works Association

BELOW: Memories from the 2013 Roadeo. The 2014 event will be held in September.

APWA Executive

PRESIDENT
Dean Berrecloth
Town of Killam
P: 780-385-3783
E: deanb@town.killam.ab.ca

VICE PRESIDENT & DIRECTOR: IDEA GROUP LEADER & NORTHERN ALBERTA, IDEA GROUP LEAD
John Allen
E: j0hnallen@shaw.ca

PAST PRESIDENT & DIRECTOR: MEMBER SERVICES & RECRUITMENT, HOUSE OF DELEGATES MEMBER
Patty Podoborozny
Strathcona County
P: 780-992-6750
E: patty.podoborozny@strathcona.ca

DIRECTOR, ALLIED MEMBERS
Chris Deckhoff
P: 780-960-1690
E: cdeckhoff@acpapplied.com

BOARD OF DIRECTORS

DIRECTOR AT LARGE
Peter McDowell
Town of High River
P: 403-652-2110
E: pmcdowell@highriver.ca

DIRECTOR, OUTREACH (EVENTS)
Dave Henning
Manger, Roadway Services
City of Lloydminster
P: 306-825-4581
E: dhenning@lloydminster.ca

DIRECTORS: IDEA GROUP — CENTRAL ALBERTA
Daniel Foerster
City of Airdrie
P: 403-540-8744
E: daniel.foerster@airdrie.ca

Frank Enes
MD of Rockyview
P: 403-478-8279
E: FEnes@rockyview.ca

DIRECTOR, IDEA GROUP — PEACE COUNTRY
Rob Naugler
T: 780-532-7393
E: rnaugler@countygp.ab.ca

DIRECTOR: IDEA GROUP — SOUTHERN ALBERTA
Henry Vanderpyl
T: 403-329-1404
E: vanderpylh@ae.ca

STAFF

EXECUTIVE DIRECTOR & PUBLIC WORKS SUPERVISOR PROGRAM REGISTRAR
Stacy Byer
T: 403-990-APWA (2792)
F: 403-398-0665
E: admin@publicworks.ca

It is that time of year—and the point in my career—that I bring you greetings as your newly appointed president of the Alberta Public Works Association (APWA).

For those of you I have not had the opportunity to meet, I am Dean Berrecloth, Public Works Superintendent for the Town of Killam. Killam is a small town in east central Alberta and my wife, three teenage daughters and 11 year old son are proud to call this town home. I am thankful to the Town of Killam for allowing and supporting me as the president of the APWA. I have been in the public works field for 25 years, give or take a few. (I hear the memory is the first to go.)

I started as a summer student for Town of Viking while I was in high school. After high school I tried numerous occupations but was eventually lured back to public works—and looking back at the people I have met throughout the years, I am glad I did. This just shows that we have to work hard at keeping our young people interested in public works.

While I was working for the Town of Edson, I was encouraged by a colleague to attend an APWA conference in Red Deer. Of course, I was a little reluctant to attend but I did and have not looked back since. From becoming a delegate to chairing the Northern Area Idea Group, to co-chairing the APWA Equipment Rodeo, to being coerced into the vice presidency and now to being your president—it has been quite the journey. I say thank you to those of you that talked me into this.

This summer I was very proud to represent the APWA and the Town of Killam during the events in High River. This just shows how we, as APWA members, band together in the event of a disaster of

this magnitude. We have all formed our own relationships and made new friends along the way. I, for one, will never forget those new friendships.

This past month we held our 16th Annual Equipment Roadeo, with Team St. Albert taking home the trophy. Team Volker Stevin took home the Terry Ream team spirit award. All the results of the equipment roadeo can be found on the Alberta Public Works Association website.

Our annual Partners in Excellence Conference was also held on September 30 to October 2, 2013. The trade show and educational sessions were a great success thanks to the committee members, exhibitors and speakers who helped make this years' conference a success. We had a visit from representatives from Toronto, promoting the 2014 Congress, which is dubbed the Best Show in Public Works. It will take place August 17-20, 2014. From what I have heard, it is an opportunity you don't want to pass up!

On behalf of the APWA, I would like to congratulate the Project of the Year Award recipients. The details of their submissions are included in this issue.

- MPE Engineering, Rocky View County;
- East Balzac Potable Water Supply System;
- Stantec and Athabasca County;
- Wandering River Pipeline/Reservoir Design Build;
- Alberta Traffic Supply, Alberta Transportation; and
- Movable Work Zone Barrier Project.

In closing, I look forward to meeting more of you throughout my time as president. I would like to take this time to thank Past President, Patty Podoborozny, as well as past and present board members, for all of your hard work and dedication towards the Alberta Public Works Association.

To find out more information, visit us at www.publicworks.ca.

Thank you again for your continued support of our association. Have a safe winter.

Dean Berrecloth
President
Alberta Public Works Association

A Message from the Canadian Public Works Association, Saskatchewan Chapter

Board of Directors

PRESIDENT
George Jakeman

PAST PRESIDENT
Van L. Simonson

TREASURER
Dale Petrun, ASCT

DELEGATE
Andrew G. Stevenson

DIRECTOR
Brent Bagshaw

DIRECTOR
Aaron Brick

DIRECTOR
Stewart Schafer, P Eng

CHAPTER ADMINISTRATOR
Carla Weber

HISTORIAN
Van L. Simonson

The Canadian Public Works Association, Saskatchewan Chapter looks forward to enhancing membership value by partnering in *The Roadrunner* magazine. The magazine will feature our upcoming events and keep you connected to all of the association's current information. We would like to thank our members and our suppliers for joining us in this endeavour.

Be sure to join us at our Annual Conference & Tradeshow, to be held February 26-28, 2014 at the Delta Hotel in Regina, Sask.

George Jakeman
President
The Canadian Public Works Association, Saskatchewan Chapter

A Message from the Canadian Public Works Association, Manitoba Chapter

Officers

PRESIDENT
Steve Blayney

PAST PRESIDENT
Burton Mikolayenko

PRESIDENT ELECT
Kas Zurek

SECRETARY
Alexis Wilcott

TREASURER
Bonnie Konzelman

HOUSE OF DELEGATES REPRESENTATIVE & CPWA BOARD OF DIRECTORS REPRESENTATIVE
Bill Grabowecky

DIRECTORS
Rob Loudfoot
Jim Berezowsky
Nancy Windjack
Joel Martens
Mike Neill
Ron Watson
Mark Wiese

HISTORIAN
Ron Steinke

The Canadian Public Works Association, Manitoba Chapter is excited to become part of *The Roadrunner* magazine family and we look forward to working with all partners to provide an informative and relevant tool for our membership. Upcoming issues will feature our signature events and showcase information relevant to public works practitioners in Manitoba and Western Canada.

We'd like to take this opportunity to announce the MPWA General Meeting and Presentation of the First Annual Project of the Year Awards. This award promotes excellence in the management and administration of public works projects by recognizing the alliance between the managing agency, the consultant/architect/engineer, and the contractor who, working together, complete public works projects. The winners were announced on December 4, 2013, in Winnipeg, Man.

Our chapter will be hosting a Pavement Conference on February 27, 2014. This one-day conference will highlight pavement innovations and industry issues in both an urban and rural environment. You can register for this event January 27 to February 23, 2014, at http://manitoba.cpwa.net. Further details are available by contacting our office.

Scott Payne, C.E.T, PMP
President
The Canadian Public Works Association, Manitoba Chapter

AMSA
ALBERTA MUNICIPAL SUPERVISORS ASSOCIATION

A Message from the Alberta Municipal Supervisors' Association

I would like to introduce you to the Alberta Municipal Supervisors Association (AMSA). Our association is comprised of mostly senior supervisory staff from rural municipality public works departments. Part of our goal is to improve service to our respective municipalities, citizens, council and CAO's through individual development of knowledge related to our professional task. Our association provides a forum for the exchange and development of ideas, as well as professional development opportunities.

AMSA is proud to join the Public Works Association of British Columbia (PWABC) and the Alberta Public Works Association (APWA) in the production of *The Roadrunner* magazine publication. This partnership with PWABC and APWA strengthens the commitment to our members to provide a broader perspective on new and innovative public works related initiatives.

One upcoming initiative that AMSA is involved with is a provincial committee established for the purpose of looking at alternative bridge structures. We are encouraged by the fact that the province has established this committee to look into identifying new engineered bridge structures that have the potential to significantly reduce the bridge deficit that exists at both the provincial and municipal level. AMSA would like to thank both the Alberta Association of Municipal Districts and Counties (AAMD&C) and the province of Alberta, for the opportunity to have two of our members participate on this committee.

In addition, each year AMSA hosts a spring and fall conference. This year's fall conference took place, from November 12 to the 14, 2013, in Edmonton. There will be various presentations and guest speakers. The opportunity to get together to discuss impacts of legislative changes, review ground-breaking technologies and examine management strategies, proves beneficial to both seasoned public works professionals and newcomers to the field.

Finally, thank you to all the public work's staff across Alberta, especially those in the southern region of the province whom, due to the floods, have had a challenging spring and summer. We, and all Albertans, appreciate their hard work. We are lucky to have dedicated public works professionals who consistently demonstrate unwavering commitment to their communities. We also feel for the families of the public works crews and thank them for their understanding as, quite often, events of this nature take people away from their families for extended periods of time.

Again, I would like to thank the PWABC and the APWA for their partnership and for the opportunity to become part of *The Roadrunner* magazine. Together, we can continue to educate ourselves and keep our organizations at the forefront of innovation.

Marshall Morton
AMSA President
Director, Public Works
Clearwater County

AMSA Convention Schedule

	Spring	Fall
2014	March 17-19 Shaw Conference Centre	November 18-20 Shaw Conference Centre
2015	March 16-18 Shaw Conference Centre	November 17-19 Shaw Conference Centre
2016	March 14-16 Shaw Conference Centre	November 14-17 Shaw Conference Centre
2017	March 20-22 Shaw Conference Centre	November 14-17 Shaw Conference Centre

AMSA Hires New Executive Directory

We are pleased to announce that the Alberta Municipal Supervisors Association (AMSA) has hired an Executive Director to assist in managing the day to day operations of the association.

With over 13 years' experience, Christine Heggart is a seasoned communications professional. Having worked for the public, private and not-for-profit sectors, she has a broad skill set that includes public relations, media relations, event coordination, public consultation and project management.

For the last five years, Christine has worked for a municipal government in west central Alberta as Communications Coordinator. She holds a diploma in Marketing from SAIT, a bachelor's degree in Management from the University of Lethbridge and a National Advanced Certificate in Local Authority Administration from the University of Alberta.

Christine lives just outside Rocky Mountain House with her husband and three daughters, who are five, seven and ten, and her hobbies include camping, fishing and travelling.

Christine will be the new point of contact for website information, conference information, potential sponsorship opportunities, and AMSA general information. We have signed a one year contract with Christine ensuring that this arrangement will work for both parties. We, as the executive, are excited to see AMSA continue to grow and thank all of our membership for your continued feedback!

One of the items Christine will be working on right away is updating our website! We would like to add a "Career Opportunities" section, as to allow our members one more option to advertise position vacancies. We also want to update the information that is available to both members and on the public pages as well.

Thank you to Rick and Brad from Brazeau for all of the work on the website to date and for taking the time to go through it with Christine and I, as this transfer takes place.

Welcome to our association Christine. We look forward to your ideas on how to continue to grow the AMSA brand.

Christine will soon have an email address and phone number set up so that you can contact her. We will let everyone know when her contact information is available.

Brinkman & Associates::Urban Restoration Cost-effective ecosystem restoration solutions

With 30+ years of ecosystem restoration experience, Brinkman & Associates Reforestation Ltd. brings a wide range of professional expertise to all of our projects, including biologists, ecologists, foresters, engineers and project management professionals.

Capabilities for Municipalities & First Nations across Canada.
Please contact John Grindon at 604-521-7771

Brinkman & Associates Reforestation
520 Sharpe St., New Westminster, BC V3M 4R2
www.Brinkmanforest.ca

INTEGRATED TOOL SOLUTIONS, LLC

Check out our video at www.integratedsolutions.com Email: rjsorric@integratedsolutions.com

Jackhammer Lift Assists

Reduce Jackhammer related back injuries and increase production with the Jackhammer Lift Assist. Weighing only 9 lb. and providing a 350 lb. lift force, it repositions the jackhammer for each cut. Now available in a 60 lb. version.

Water, Wastewater and Recycling…Oh My!

Legal Challenges Facing Municipal Utility Services

Part 2 of 3 (Part 1 was printed in the Fall 2013 issue of *The Roadrunner*. Past issues are available on both PWABC and APWA's websites)

SERVICE CONNECTIONS

The general rule is that the owner of a parcel of land is responsible for the construction, maintenance and repair of a service connection of a municipal public utility located above, on or underneath that owner's parcel of land (*MGA*, s. 37(1)). Moreover, if the municipality is not satisfied with the construction, maintenance or repair of the service connection, the municipality may require the owner of the parcel of land to do something in accordance with its instructions with respect to the construction, maintenance or repair of the system or works by a specified time (*MGA*, s. 37(2)). If the thing has not been done to the satisfaction of the municipality within the specified time, or in an emergency, the municipality is authorized to enter on any land or building to construct, maintain or repair the service connection (*MGA*, s. 37(3)).

Alternatively, council may, as a term of providing a municipal utility service to a parcel of land, authorize the municipality to construct, maintain and repair a service connection located above, on or underneath a parcel of land (*MGA*, s. 38(1)). Subsection 38(2) authorizes the municipality acting pursuant to section 38(1) to enter onto any land or building for the purpose of constructing, maintaining or repairing a service connection.

A municipality that has constructed, maintained or repaired a service connection pursuant to subsection 37(3) or section 38:

(1) Must restore the lands entered upon as soon as practicable (s. 39(1)); and
(2) Is entitled to recover its costs relating to the construction, maintenance and repair, in addition to the restoration costs referred to in (1), and the costs are an amount owing to the municipality by the owner of the parcel (s. 39(2)).

AGREEMENTS WITH OTHER PUBLIC UTILITIES

Certain agreements between a municipality and a third party for obtaining or providing utility service require approval from the AUC.

Franchise agreements

As noted earlier, when a third party is providing a utility service within a municipality's boundaries under a franchise agreement with the municipality, this does not constitute a municipal public utility service. Rather, the third party (often an investor owned public utility) is providing the service within the municipality's boundaries with the permission of that municipality as a franchisee.

This is in contrast to circumstances where a municipality has retained a third party to provide or assist with providing a utility service on the municipality's behalf. This latter situation does constitute a municipal public utility service.It may be difficult to ascertain the difference between a situation where the municipality is providing the utility service through a contractor or third party[1] (which will constitute a municipal public utility service and which does not require approval pursuant to section 45 of the *MGA*) and a situation where it is the third party providing the utility service (which will require approval pursuant to section 45 of the *MGA*). Consider what involvement the municipality has in the service. For example, consider who is imposing and collecting the service charge(s).

Typically, the entity providing the service is the one imposing and collecting the service charges. For example, under a franchise agreement, generally the franchisee (the public utility) is the one billing customers. If it is the municipality imposing and collecting utility charges, this is a good indication that the service is a municipal public utility service.

Franchise agreements are governed by section 45 of the *MGA*. A franchise agreement:

- May be exclusive or not;
- May allow the utility to provide service in all or just part of the municipality;
- Shall be for a term of not more than 20 years;
- Can include the municipality granting the other utility a right to use the municipality's property for the construction, operation and extension of a public utility in the municipality; and
- May include a franchise fee (whereby the public utility pays a fee to the municipality as consideration for the right to provide service within the municipality).[2]

Municipal public utilities are generally exempt from regulation and AUC intervention. However, the AUC does have jurisdiction to consider a complaint with respect to a municipal public utility service pursuant to sections 43 and 44 of the MGA.

There are certain principles which the AUC seems to consistently apply with respect to review of franchise agreements and the franchise fees prescribed therein, including:

- It is the municipality that determines the fee, which is the consideration paid by the utility for the exclusive right to provide service to the residents of the municipality;
- In addition to the franchise fee, the municipality may also charge the utility linear property taxes for the utility's use of municipal lands to provide utility service;
- Any kind of compensation a municipality is receiving pursuant to a franchise area agreement is subject to the AUC's review;
- The AUC will approve franchise area agreements where the municipality may set or revise the franchise fee when there a maximum or cap franchise fee specified in the agreement (for example, the municipality may revise the fee annually with the underlying agreement being in effect for 10 years so long as the franchise fee will not exceed 'x' during the period of the agreement)—in these cases, the AUC will consider whether the maximum or cap franchise fee is reasonable;
- The maximum or cap franchise fee may vary from municipality to municipality depending on their circumstances; and
- A franchise fee should not impact customers receiving service outside of the municipality and the franchise fee should be visible to customers.

Before the franchise agreement is made, amended or renewed, the agreement must be approved by the AUC and advertised (*MGA, s.* 45(3)).[3] Approval is not required when the franchise agreement is between a municipality and a regional services commission or if the agreement is between a municipality and its subsidiary (*MGA*, ss. 45(4)(5)).

The *MGA* provides that a franchise agreement that is not renewed continues in effect until either party, with approval of the AUC, terminates the agreement on six months' notice (s. 47(1)). The *MGA* also provides that once notice pursuant to section 47(1) has been provided, the municipality has the right to purchase the rights, systems and works of the public utility (s. 47(2)). If no agreement on the purchased can be reached, the matter may be referred to the AUC who, in turn, must by order fix the terms and price of the purchase (ss. 47(3)(4)).

Long term supply agreements

AUC approval is also required in situations where a municipality wishes to make an agreement to provide a public utility with water, steam, fuel or electricity for a period that could exceed five years (with rights of renewal) (*MGA*, ss. 30(1)(2)).[4]

LEGAL CHALLENGES AND APPEALS RELATING TO MUNICIPAL PUBLIC UTILITIES

As discussed earlier, municipal public utilities are generally exempt from regulation and AUC intervention. However, the AUC does have jurisdiction to consider a complaint with respect to a municipal public utility service pursuant to sections 43 and 44 of the *MGA*.[5]

Section 43 deals with an appeal of a municipal public utility's service charges, rates or tolls and provides:

1. A person who uses, receives or pays for a municipal utility service may appeal a service charge, rate or toll made in respect of it to the Alberta Utilities Commission, but may not challenge the public utility rate structure itself.
2. If the Alberta Utilities Commission is satisfied that the person's service charge, rate or toll:
   a. Does not conform to the public utility rate structure established by the municipality;
   b. Has been improperly imposed; or
   c. Is discriminatory.

   The Commission may order the charge, rate or toll to be wholly or partly varied, adjusted or disallowed.

Section 44 deals with a dispute between a municipal public utility and another municipality and provides:

1. If
   a. A municipality is supplying a utility service to a person outside the municipality, and
   b. There is a dispute between the municipality supplying the utility service and any other municipality in connection with the rates, tolls or charges,

   The dispute may be submitted to the Alberta Utilities Commission.
2. The Commission may make an order on any terms and conditions that it considers proper.
3. This section applies whether or not a public utility is subject to the control and orders of the Alberta Utilities Commission pursuant to section 111 of the *Public Utilities Act* or section 4 of the *Gas Utilities Act*.

Under section 43 of the *MGA*, a user of a municipal public utility may not challenge the rate structure itself. A user may, however, appeal on the basis that the charge, rate or toll does not conform to the rate structure established by the municipality, was improperly imposed or was discriminatory in nature. To demonstrate that a charge, rate or toll does not conform to the rate structure established the appellant will have to show that the charge, rate or toll was calculated incorrectly. For example, that a particular charge, rate or toll is not calculated or imposed in accordance with the provisions of the applicable utility bylaw.

BROCKWHITE
CONSTRUCTION MATERIALS
YOUR SOURCE.
YOUR RESOURCE.

• Drainage Products
• Geomembranes
• Grid Reinforcement
• Silt Fence
• Storm Water Erosion Control
• Flexamat
• Erosion Control
• Geotextiles
• Gabions
• Pourous Paving Systems
• Turbidity Curtains
• Construction/Fabrication

Branches across British Columbia and Alberta.
Visit us online at www.BrockWhite.ca for the location nearest you.

HELPING BUILD YOUR SUCCESS
www.BrockWhite.ca

To demonstrate that a charge, rate or toll was improperly imposed an appellant will have to show that the charge, rate or toll was imposed unlawfully. This can include circumstances where the charge, rate or toll was imposed without an authorizing bylaw in place or was charged incorrectly on a plain reading of the bylaw. Municipalities may not generally bill for utilities retroactively, so the authorizing bylaw should be in place before a municipality charges for a utility service. To demonstrate that a charge, rate or toll is discriminatory an appellant will have to show that either:

a. The appellant was treated differently than other users when no reasonably distinction between the appellant and those other users existed; or
b. The appellant was treated the same as other users when there was good reason or basis to treat them differently.

The AUC has read into section 43(2)(c) that a charge, rate or toll must be "unduly discriminatory" as there is some level of discrimination inherent in all rates.[6]

Some examples

AUC Decision 2010-526 (An Appeal with respect to Wastewater Charges)

In this case, a group of customers of a municipal public utility sought to appeal certain rates charged by the municipal public utility for the disposal of wastewater at a sewage lagoon. The municipal public utility did not own or operate the sewage lagoon (it was owned and operated by a regional services commission), but the municipality had entered into a service agreement with the regional services commission whereby ratepayers could use the sewage lagoon. The regional services commission charged the municipality for each municipal customer using the service and the municipality in turn charged the customer.

From 2006 through 2007, the municipal public utility charged a flat rate to customers (irrespective of how many times each customer accessed the sewage lagoon). The rate was essentially a flow through rate whereby the municipality imposed the same flat rate on the customer that the regional services commission imposed on the municipality. During this time, the municipality did not have a utility bylaw addressing this service or allowing for the imposition of the charge it was imposing. The municipality did have a more general bylaw that provided that the municipality could, by resolution, amend any of its fees and charges from time to time.

In 2008 and 2009, the municipality changed its rate structure and set up a 3 tiered fee system whereby customers would be charged based on the amount of times they accessed the sewage lagoon (as opposed to all customers paying the same flat rate irrespective of how many times they used the disposal service in a year). The regional services commission continued to impose a flat per customer fee on the municipality. The municipality provided evidence that the three tiered rate was designed to recover not only the costs imposed by the regional services commission, but also certain costs of the municipality associated with providing the

utility service and a rate stabilization fee of three per cent to mitigate future spikes in the costs of this service. The municipality argued that charging customers based on the number of uses was not unduly discriminatory, that it recovered the municipal public utility's costs and that it sought to encourage efficiency and conservation.

The municipality also passed a bylaw clearly establishing the municipal public utility and providing for its recovery of the costs of providing the wastewater disposal service.

The appeal was twofold:

1. The rates charged by the municipal public utility in 2006 and 2007 were improperly imposed pursuant to section 43(2)(b) of the *MGA* during the period in which the municipality did not have a bylaw addressing the utility rates and charges; and
2. The rates charged by the municipal public utility in 2008 and 2009 were discriminatory pursuant to section 43(2)(c) of the *MGA* as they imposed significantly higher rates on users who used the system more (without regard for the fact that the regional services commission continued to charge a flat rate that was unrelated to the amount of times any given customer accessed the sewage lagoon).

With respect to the charges for 2006 through 2007, the AUC concluded that a bylaw was required to authorize the municipality to collect wastewater disposal rates. Given that there was no such bylaw, the AUC concluded that the 2006 and 2007 charges were improperly imposed. The AUC directed the municipality to repay the amounts collected in 2006 and 2007 for wastewater disposal rates paid by the appellants.

With respect to the charges for 2008 through 2009, the AUC held that the tiered rate structure was not unduly discriminatory and dismissed this portion of the appeal. In addressing this ground of appeal, the AUC reviewed what constitutes discrimination in the context of utility matters and referred back to one of its earlier decisions considering section 43(2)(c) of the *MGA*:

> The Commission finds that discrimination may exist where there is "a failure to treat all persons equally where no reasonable distinction can be found between those favored and not favored."
>
> In assessing whether any service charge, rate or toll is sufficiently discriminatory so as to cause the Commission to act pursuant to section 43, the Commission finds it important to assess the presence or absence of any rationale or logic underlying the charges applied by a municipality to a customer, and finds it important to understand the whole context by which rates, tolls and charges are being imposed.[7]

AUC Decision 2012-258 (A Water and Sewer Charges Complaint)

In this case, a group of customers being provided with various utility services by a municipality sought to challenge the municipality's decision to charge flat, fixed fees for services even during periods when the services (such as water) were disconnected. Historically, the municipality had allowed its residents to disconnect water services on a temporary basis (e.g., for residents that travelled south for the winter months) and the municipality would deactivate any utility account for a resident who had temporarily disconnected its water service (resulting in the resident not paying for any utility charges including water, sewer, storm sewer, garbage and recycling) during the period in which the water was temporarily disconnected.

In 2010, the municipality changed its practice and advised residents that, irrespective of whether water service was disconnected or not, no utility accounts would be deactivated and residents would remain responsible for flat or fixed fees at all times (even when consumption was zero and when a resident had requested that their water service be temporarily disconnected). The municipality was also seeking to calculate the applicable sewer rate differently for those accounts where the water was temporarily disconnected for a period of time during the year.

A further complaint was submitted by a tenant within the municipality whose request to open a utility account in her own name had been refused.

In the latter part of 2011, the municipality amended its utility bylaw to clarify its changed practices with respect to temporary disconnections of water service and a resident's responsibilities for flat and fixed charges irrespective of consumption. The 2011 bylaw also clarified that the municipality would not allow tenants to open new utility accounts in their own names.

The grounds of appeal were as follows:

1. The rates charged by the municipal public utility to residents whose water service was temporarily disconnected (or who had requested a temporary disconnect of water service) did not conform to the municipality's rate structure, were improperly imposed and were discriminatory; and
2. The municipality violated its bylaw in refusing to allow the tenant to open up a utility account in her own name and that distinguishing between landowners and tenants in this regard was discriminatory.

The AUC found that the applicable bylaw at the time the municipality purported to change its practices did allow for the temporary disconnection of water services (which was not changed until the bylaw was amended nearly two years later). Moreover, the AUC could not find any language in the then-applicable bylaw that would authorize the municipality to charge flat or fixed fees for water service when the service had been temporarily disconnected at the request of the owner. The AUC held that if the municipality wanted to charge such an "idle service charge" that it should have stated this clearly in the applicable

bylaw (as it did in the amended bylaw). Based on the foregoing, the AUC concluded that the water service charges did not conform with the municipality's rate structure and were improperly imposed (until the time when the municipality had amended its bylaw to properly reflect its new practices).

With respect to the sewer charges, the AUC found that the way in which the municipality was seeking to calculate the applicable sewer rate for those residents who had temporarily disconnected their water service in the year was not clearly provided for in the bylaw. As such, the AUC concluded that the sewer charges did not conform with the municipality's rate structure and were improperly imposed (until the time when the amended bylaw clarified this calculation).

The municipality was directed to refund all water and sewer charges to the complainants that did not comply with the rate structure and were improperly imposed.

With respect to the other utility charges (storm sewer, garbage and recycling), the AUC held that the then-applicable bylaw did not contemplate that a disconnection of water services would result in a discontinuance of these other utility services. Simply because the municipality had formerly had a practice which resulted in residents who had disconnected their water service not receiving utility charges for any of these other services did not mean that this was a properly authorized practice (absent wording in the applicable bylaw to that effect, of which there was none). As such, the complaints with respect to the storm sewer, garbage and recycling charges were dismissed.

Lastly, with respect to the complaint by the tenant wishing to open a utility account in her own name, the AUC found that her request predated the amended bylaw which clarified that the municipality would not open new accounts in a tenant's name. At the time of the tenant's request, the applicable bylaw did contemplate a tenant being able to open a utility account subject to paying a deposit. In light of the foregoing the AUC directed that the municipality should open a utility account in the name of the tenant if she reiterated her request and provided the municipality with the stipulated deposit.

Part 3 of this article will be published in the Spring 2014 issue of The Roadrunner.

BROWNLEE LLP
Barristers & Solicitors

For more information:

2200 Commerce Place
10155 -102 Street
Edmonton, AB T5J 4G8
P: (780) 497-4800 • F: (780) 424-3254

2000 Watermark Tower
530 - 8th Avenue S.W.
Calgary, AB T2P 3S8
P: (403) 232-8300 • F: (403) 232-8408

contactus@brownleelaw.com
+Municipal Help Line: (800) 661-9069

References

1. Or, stated another way, where a contractor or third party is providing the service "on behalf of" the Municipality.
2. Franchise fees vary in terms of the percentage being charged and what the franchise fee is applied to. For example, with respect to natural gas, there is a wide range of franchise fees charged by municipalities throughout the province ranging from 0% to 35%. In addition, there is more than one method in which to calculate the franchise fee. The typical arrangement appears to be a franchise fee based on a percentage of gross delivery revenues (excluding the cost of gas). This typical arrangement is accompanied by the Municipality also charging the utility linear property taxes. There are, however, other municipalities whose franchise fee is based on a % of revenue including cost of gas. In these instances, it appears as though this fee (referred to in some the applicable franchise area agreements as a "special franchise tax") is one fee in lieu of the more traditional franchise fee + linear property taxes arrangement.
3. A municipality's obligations regarding advertising are outlined in section 606(2) of the *MGA* which requires: Notice of the bylaw, resolution, meeting, public hearing or other thing must be (a) published at least once a week for 2 consecutive weeks in at least one newspaper or other publication circulating in the area to which the proposed bylaw, resolution or other thing relates, or in which the meeting or hearing is to be held, or (b) mailed or delivered to every residence in the area to which the proposed bylaw, resolution or other thing relates, or in which the meeting or hearing is to be held.
4. AUC approval is not required if the proposed agreement relates to or arises from the supply of electric power under (a) a power purchase arrangement, (b) a generation asset held or sold by the Balancing Pool, or (c) a direct sales agreement. Refer to *MGA*, ss. 30(3)(4).
5. In addition, section 602.14 of the *MGA* provides: "If there is a dispute between a commission and another commission or a commission and any municipal authority with respect to (a) rates, tolls or charges for a service that is a public utility, (b) compensation for the acquisition by the commission of facilities used to provide a service that is a public utility, or (c) the commission's use of any road, square, bridge, subway or watercourse to provide a service that is a public utility, any party involved in the dispute may submit it to the Alberta Utilities Commission and the Alberta Utilities Commission may issue an order on any terms and conditions that the Alberta Utilities Commission considers appropriate."
6. Decision 2004-021, p. 8.
7. Decision 2010-462, at paras. 77 - 78.

Acting Mayor Patricia Heintzman, Juliana Chadwick of the District's Operations team, BC Public Works Association Past-President, Murray Steer, and the District's Director of Operations Bob Smith.

District of Squamish Wins National Public Works Week Award

The Canadian Public Works Association (CPWA) has announced that British Columbia's District of Squamish has been selected to receive the highest award for their May, 2013 National Public Works Week (NPWW) celebration. The District of Squamish was honored by CPWA with the First Place award in the "Small Centre" category of municipalities with population less than 75,000. The award was presented to the Squamish Operations Department by British Columbia Public Works Association Past-President, Murray Steer, manager of equipment services for the City of Vancouver during the Squamish Council Meeting on November 26, 2013.

"For the selection of the NPWW 'Small Centre First Place' award, CPWA recognizes the excellence of the District of Squamish's National Public Works Week Community Celebration events and activities. Their education event included an open house that hosted community members, the Mayor, and school children at the public works facility for tours and demonstrations of public works services. It provided a unique opportunity to meet 'face to face' with the public works professionals who provide those services," said Steer.

Other aspects of Squamish's NPWW Celebration included public outreach through the Public Information team, who implemented an extensive media campaign that included webpage, newspapers and Facebook page communications about the celebration, as well as staff emails. For the NPWW event, staff were involved in the Open House, and helped organize the events beforehand. In addition, the Council proclaimed Public Works Week and the Mayor opened Public Works day with a ribbon-cutting ceremony. A charity event was included, as well as the promotion of public works as a career choice for the working force of the future.

"This was a community awareness opportunity to highlight for our citizens the important work that public works does every day to contribute to the quality of life in our community," said Director of Operations for the District, Bob Smith. "It was important for us to get our staff involved in this event, and for them to recognize the significance of their own jobs and the services they provide. The promotion of public works as a career choice is also a significant aim of the event. This event was another indication of the great teamwork that is shown in our department each day," he added.

PWABC Public Works Association of British Columbia

PWABC **Events 2014**

JANUARY

Asbestos Worker Training - Vancouver
Details coming

Introduction to Public Works for First Nations
January 29-30, 2014
Prince George

Risk Assessment, Analysis and Management
January 31, 2014
Vancouver & Webinar

FEBRUARY

Introduction to Public Works
February 18-19, 2014
Vancouver & Webinar

Introduction to Construction Inspection
Dates TBD

Estimating
Dates TBD

MARCH

"Women in Public Works" Luncheon
March 7, 2014
Richmond

Construction Management
Dates TBD
Island, Kootenay's

Construction Supervision
Dates TBD
Lower Mainland, Okanagan

INFR 1110
Dates TBD
Vancouver

APRIL

INFR 1120
Dates TBD
Vancouver

Asset Management
Dates TBD
West Kelowna

MAY

INFR 1130
May 5-9, 2014

Feasibility/Business Case
Dates TBD
Island

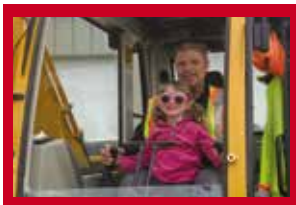
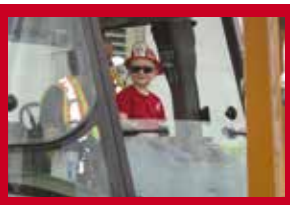

Public Works Association of BC recognizes City of Kamloops

On September 17, 2013, the City of Kamloops received the Public Works Week – Community Celebration Award during the Public Works Association of BC Annual Conference and Trade Show.

This award recognizes a municipality or region that uses Public Works Week to educate and inform the public about the essential role that public works plays in the quality of community life as well as promoting the choice of public works as a career. Criteria for award selection included categories such as public outreach, education, creativity and staff involvement.

The City of Kamloops has approximately 200 staff providing public works services, who strive to ensure that infrastructure, facilities and services that are vital to health, safety and the well-being of the residents of Kamloops are maintained.

On May 25, 2013, the City of Kamloops celebrated National Public Works Week by holding its third Open House at the Public Works Centre. The Open House was a free event for residents, with a variety of activities and demonstrations. It drew over 500 people of all ages.

With collaboration from Kamloops Fire Rescue, Kamloops RCMP, Volunteer Auxiliaries, management and CUPE staff, the event included activities such as a demonstration of the chipper truck, the building of birdhouses, rides in a lift truck, a hanging basket demonstration, water meter displays and many other machinery demonstrations. Information booths provided tips for the home and garden, environmental sustainability information, and a better understanding of how the city operates.

A free barbeque with refreshments was offered to allow residents to spend the day at the Public Works Centre.

The City of Kamloops was also a runner-up for the National Award.

Women in Public Works: Join us March 7, 2014!

In the public sector women are gaining ground—nearly 30.7 per cent are in the policy leader roles (department heads and top advisors). This represents an increase of seven per cent since 1997.

Savvy leaders recognize the contributions that a diverse management team brings to an organization. A 2004 study by Catalyst, the New York based organization that tracks the progress of women in business, revealed that companies with more women at the top performed better financially.[1] Further, women managers are consistently rated higher than their male counterparts on 37 of 47 critical management qualities, such as leadership, social skills, problem-solving and decision-making.[2]

Women, get your applications in—the face of public works is changing and it is not just for men anymore. Public works may just be the niche to exploit your leadership talents.

On March 7, 2014, we will be celebrating Women in Public Works and International Women's day at the River Rock Hotel in Richmond, B.C., with a luncheon and guest speakers from 11:00 am to 2:00 pm. Watch our website for details (www.pwabc.ca).

References

1. CarrerBuzz.com, Newsfeed, "The Case for Corporate Life". July 21, 2005, OC Metro, by Kimberly A. Porrazzo.
2. Career Journal.com *The Wall Street Journal*, "Breaking the Glass Ceiling; What's Holding Women Back?" by Valerie Patterson.

National Public Works Week
May 18-14, 2014

American Public Works Association Congress & Exposition
August 17-20, 2014

APWA **Events 2014**

EDUCATION EVENTS

Managing Change
January 3-5, 2014
6:00-9:00 p.m. (Friday) and 8:30-4:30 p.m. (Saturday & Sunday)
NAIT Campus, Edmonton

Increasing Productivity/Improving Employee Work Habits Through Performance Management
January 7-21, 2014
6:00-9:15 p.m. (Tuesday & Thursday Evenings)
NAIT Campus, Edmonton

Delegating/Assigning Tasks Effectively & Developing Teamwork
January 10-12, 2014
6:00-9:00 p.m. (Friday) and 8:30-4:30 p.m. (Saturday & Sunday)
NAIT Campus, Edmonton

Time/Stress Management
January 17-19, 2014
6:00-9:00 p.m. (Friday) and 8:30-4:30 p.m. (Saturday & Sunday)
NAIT Campus, Edmonton

Managing Change
January 23-February 6, 2014
6:00-9:00 p.m. (Friday) and 8:30-4:30 p.m. (Saturday & Sunday)
NAIT Campus, Edmonton

Problem Solving and Decision Making
January 31-February 2, 2014
6:00-9:00 p.m. (Friday) and 8:30-4:30 p.m. (Saturday & Sunday)
NAIT Campus, Edmonton

Financial Administration for Non-Financial Managers
February 7-9, 2014
6:00-9:00 p.m. (Friday) and 8:30-4:30 p.m. (Saturday & Sunday)
NAIT Campus, Edmonton

Delegating/Assigning Tasks Effectively and Developing Teamwork
February 11-25, 2014
6:00 p.m.-9:15 p.m. (Tuesday & Thursday Evenings)
NAIT Campus, Edmonton

Time/Stress Management
February 27-March 13, 2014
6:00 p.m.-9:15 p.m. (Tuesday & Thursday Evenings)
NAIT Campus, Edmonton

Conducting Interviews and Meetings
February 28-March 2, 2014
6:00-9:00 p.m. (Friday) and 8:30-4:30 p.m. (Saturday & Sunday)
NAIT Campus, Edmonton

Diversity in the Workplace
March 7-9, 2014
6:00-9:00 p.m. (Friday) and 8:30-4:30 p.m. (Saturday & Sunday)
NAIT Campus, Edmonton

Role of the Supervisor
March 14-16, 2014
6:00-9:00 p.m. (Friday) and 8:30-4:30 p.m. (Saturday & Sunday)
NAIT Campus, Edmonton

Conducting Interviews and Meetings
March 18-April 1, 2014
6:00 p.m.-9:15 p.m. (Tuesday & Thursday Evenings)
NAIT Campus, Edmonton

Diversity in the Workplace
April 1-17, 2014
6:00-9:15 p.m. (Tuesday & Thursday Evenings)
NAIT Campus, Edmonton

Effective Communications Skills
April 11-13, 2014
6:00-9:00 p.m. (Friday) and 8:30-4:30 p.m. (Saturday & Sunday)
NAIT Campus, Edmonton

Problem Solving and Decision Making
April 22-May 6, 2014
6:00 - 9:15 p.m. (Tuesday & Thursday Evenings)
NAIT Campus, Edmonton

Human Resources Management
April 25-27, 2014
6:00-9:00 p.m. (Friday) & 8:30-4:30 p.m. (Saturday & Sunday)
NAIT Campus, Edmonton

Employee Relations
May 8-22, 2014
6:00 p.m.-9:15 p.m. (Tuesday & Thursday Evenings)
Location: NAIT Main Campus, Edmonton

Labour Relations
May 27-June 10, 2014
6:00-9:15 p.m. (Tuesday & Thursday Evenings)
NAIT Campus, Edmonton

INDUSTRY EVENTS

CTEP Annual Conference
January 28-29, 2014
Edmonton Marriott at River Cree Resort

IDEA GROUP MEETINGS

Northern Alberta Idea Group Meeting
January 14, 2014
Sturgeon County

Peace Area Idea Group Meeting
January 21, 2014
County of Northern Lights (Manning)

Southern Alberta Idea Group Meeting
January 22, 2014
Location TBA

Central Alberta Idea Group Meeting
March 14, 2014
City of Red Deer

Northern Alberta Idea Group Meeting
April 15, 2014
City of Lloydminster

Murray Wightman, PWABC Manager of the Year

By Chris Dodd, Director PWABC, Superintendent III, Transfer & Landfill Operations Engineering Services, City of Vancouver

Murray Wightman has long been known as "the Face of the City" in Vancouver, through his regular appearances in the media, commenting on the city's preparations and responses to a variety of events, both weather-related and man-made.

He began his career with the City of Vancouver over 42 years ago, starting as a summer student in 1971. Murray was going to university from 1973 to 1976 to become a high school teacher. However, after several years of being a summer student with the city, Murray became a full time employee in 1976. His love for Public Works finally outweighed his passion to become a teacher. Little did he know, he was on a path to become one of the best teachers the City of Vancouver has had!

Murray became a Foreman 3 with Streets Operations in 1986, and he soon rose to the ranks of Superintendent II of Maintenance with Streets Operations in 1991. Upon completing 14 years in this role, Murray became the Branch Manager of Streets Operations in 2005. In January of 2012, Murray became the Branch Manager of Streets, Traffic & Electrical Operations, which consists of 416 employees that are represented by three different Unions, CUPE 1004, CUPE 15 and IBEW.

In Murray's 42 years of service for the city he has accomplished many things, some of the highlights follow. He was the point of contact for operations when any type of protest was happening around the city. Occupy Vancouver is the most recent and most of the residents at the Art Gallery got to know Murray on a first name basis. Murray would help the Vancouver Police Department and Vancouver Fire Services coordinate any dangerous situations that arose at the site. Other examples include assisting with the coordination and setup of LIVE site venues for the Canucks 2011 Stanley Cup run. Murray got to see firsthand the unfortunate events after game seven, and he played a key part in ensuring that all the employees that were working that night made it home safe.

Murray has been involved in the city's snow and ice program for 30 years. Murray is the key representative for the city in regards to media presentations. The city's snow and ice program has evolved drastically over Murray's time at the helm. Murray currently coordinates the dispatch of up to 55 units for snow removal throughout the city and is the key liaison between all external departments.

Unfortunately, Murray will be retiring from the City of Vancouver in March of 2014, and what a great loss this will be! Murray will be spending his retirement with his lovely wife of 24 years, Toni Wightman. Toni and Murray have had a long love with the water and they intend on spending their retirement boating and fishing on the open seas. Murray has often spoken about the one that got away; Toni reassures us it was never worth catching anyway! The happily married couple also love to travel and will be spending as much time as possible in the sunny warm parts of the world. Murray also has another love and that is wood working. Murray tells us he will be spending much of the colder months locked up in his garage building things Toni won't let him bring in the house.

Murray has proven over his past 42 years of service to the city that he is by far one of the best leaders this organization has seen. One of the key successes to Murray being a great leader is his willingness to listen to other's concerns and follow through on actions he commits too. He has always made time for the little things and ensured that his management group does the same. One of Murray's key sayings is "my door is always open from 5.30 a.m. on." Such a small saying but it can be so powerful! This type of commitment to our employees has helped Murray stand out from the rest of the organization as a great leader.

APWA's booth at a Career Fair held in Killam.

The 2013 CITY OF EXCELLENCE AWARD

The City of Excellence Award was created in 2010 to recognize local governments for activities that improve ground disturbance, safe excavation techniques and best practices at or around underground infrastructure, in the year previous to the award. Any BC local government, including city, village, township, district, municipality, regional district, First Nation community and Tribal Council, is eligible to be nominated for the award.

AWARDS AVAILABLE:

Gold Standard Award - An award for an organization showing exemplary procedures in all aspects of ground disturbance practices.

Innovation Award - An award for innovation in ground disturbance and excavation practices.

Education Award - An award for exemplary education to promote safe excavation practices.

Communication Award - An award for outstanding communication of excavation hazards and safe practices, internally and externally to the organization.

Award Nomination Forms and more information can be found online at www.bcmsa.ca.

Applications must be received by February 28th, 2014.

Congratulations to the 2012 AWARD RECIPIENTS:

Gold Standard Award: City of Burnaby
Communication Award: City of Surrey

Thank you to our sponsors!

The British Columbia Common Ground Alliance
Safety Authority
The British Columbia Municipal Safety Association
WorkSafe BC
The BC Construction Safety Alliance

RU2 Systems, Inc.*
The Leader in Speed Display Technology

RU2 FAST-3350
A Radar Trailer & Variable Message System with optional Data Collection

- Traffic Calming
- Traffic Management
- Work Zone Protection
- Event Promotion
- Data Collection & More...

24/7/365 Utility in One Robust, Easy to Use Package!

*Designed & Built in the U.S.A. Since 1999

Space Frame Design
Sand Rails, Race Cars, Rocket Gantries...
& Now...
Radar Trailers!
Found Only at RU2!!

See the entire RU2 line at:
www.ru2systems.com

2631 N. Ogden Road, Mesa, AZ 85215 • P 866-982-2107 • F 480-982-5237

WOS
WESTERN OIL SERVICES LTD.
since 1950

Your complete fluid handling solution
Sales, Service & Installations

Pumps - Tanks - Nozzles - Swivels - Fill/Spill Boxes
Turbine Enclosures - Manholes - Overfill Prevention - Lubes
Monitoring Systems - Fuel Management Systems - Washes
DEF Fluid Storage & Dispensing - Tank & Line Testing

OPW / Containment Solutions / GPI / Coencorp / All-Flo / Morrison Bros. / Kraus Gasboy / OPW Engineered Systems / Dixon / Lind / Alemite / RYKO / Postguard Omegaflex / Milton / Gasoila / Duro / Hosebun / SVI / Regal / Viking / Highland

Proudly Serving the BC Public Works Industry since 1950

Mainland BC
19840 57A Avenue
Langley, BC V3A 6G8
Tel: 604-514-4787
Fax: 604-514-4688

Vancouver Island
#114, 1039 Langford Pkwy
Langford, BC V9B 0A5
Tel: 250-382-5541
Fax: 250-382-0045

sales@westernoilservices.com

Jade EQUIPMENT COMPANY LTD.

SALES, SERVICE, RENTALS, AND PARTS FOR CHAMPION AND VOLVO MOTOR GRADERS / VOLVO LOADERS

Canada's Grader People

Jade Equipment Company, Ltd.
10807 209 Street, Edmonton, Alberta T5S 1Z7
Office: 780-452-7021 • Toll Free: 800-663-0715
Fax: 780-453-1477 • www.jadeequipment.com

WESTERN ASPHALT products

Bruderheim, Alberta
780-796-3437

Brandon, Manitoba
204-725-9538

Products
- ✓ HF-150
- ✓ HF-150P
- ✓ HF-250
- ✓ HF-500M
- ✓ HF-500M-HR
- ✓ RS-2
- ✓ SS-1
- ✓ SS-1H
- ✓ CMS-2
- ✓ CMS-2H
- ✓ CRS-1
- ✓ CRS-2
- ✓ CSS-1
- ✓ CSS-1H
- ✓ CQS-1H
- ✓ MC 30
- ✓ SC 250
- ✓ Dust Control
- ✓ CQS-1HP

Western Asphalt Products
55501 Range Road 203
Bruderheim, Alberta
T0B 0S0
Office: 780-796-3437
Fax: 800-878-9293
E-mail: info@westernasphalt.ca

FLYGT

a xylem brand

IN THE FLYGT TRADITION OF INNOVATION COMES FLYGT EXPERIOR™

Flygt Experior is a revolutionary wastewater pumping system that combines state-of-the-art hydraulics, premium motors and intelligent controls to achieve continuous, clog-free pumping and sustained efficiency.

- N-Technology Hydraulics
- Premium efficiency motors
- SmartRun™ Intelligent Controls

Flygt Experior approved pumps are available up to 78 kW / 105 hp. Energy costs are reduced up to 50%. Backed by the industry's most extensive sales and service organization, this is what Flygt Experior is developed to deliver time and time again.

Benefit from the superior experience of Flygt Experior™.

Inspired by you. Engineered by us.

APPROVED · HYDRAULICS · MOTORS · INTELLIGENCE · Flygt Experior™

xylemwatersolutions.com/ca
1.800.588.7867 (PUMP)

xylem
Let's Solve Water

'Tis the Season for Slips, Swerves and Slides

Best practices for limiting municipal liability on public thoroughfares

By Sonia Sahota, P.Eng, LLB, and Pam Jefcoat, MPA, LLB

The law in brief

For local governments, winter weather can bring more than a crisp chill in the air, as frost and freezing conditions settle onto roads and sidewalks and create potential hazards for pedestrians and motorists. Local governments can be held liable for injuries sustained by the public, whether it be on a sidewalk, park trail, board walk or public road. Depending on the circumstances, such injury claims are usually based on one or both of the following: 1) negligence under the common law; and 2) occupier liability under the *Occupiers Liability Act* (Act).

For a negligence claim to be successful, a person has to establish that: 1) the local government owed the person a duty of care; 2) the local government breached its duty to maintain a required standard of care; 3) the person suffered damage (personal and/or property); and 4) the damage was caused by the local government's negligence. For public spaces, where local governments are clearly inviting the public to attend, the first part of this test is often easily established. However, all four parts of the test must be established for a negligence claim to succeed.

For a claim under the Act to be successful, a person has to establish that the local government failed in its duty to take reasonable steps to ensure the public premises were reasonably safe for those using them. Claims of this type are not available for damages sustained on public roads, as the Act specifically exempts local governments from their duty with respect to public roads. In that case, a claimant would have to rely on negligence to advance his or her claim.

With respect to negligence claims a local government may be able to successfully defend its actions if those actions were based on reasonable policy decisions. Operational decisions, however, are not immune from negligence liability. For example, if a local government has a reasonable policy of inspection and maintenance in place and has complied with that policy, the local government may be able to rely on the policy to defend its actions.

This is for good reason, as local governments are not expected to become insurers for the misfortunes of the public, provided they have complied with their reasonable policy. However, if the policy was not carried out at the operational level, liability may ensue.

In British Columbia, local governments may have a statutory limitation defence if the notice requirements under the *Local Government Act* have not been complied with. Specifically, notice of damage must be given to the local government within two months from the date the damage was sustained. However, courts have the discretion to allow claims to proceed despite the lack of such notice being given if the claimant can show that there was a reasonable excuse for the delay in providing notice and that the local government has not been prejudiced by the lack of such notice.

Best practices

For local governments, the key is to limit the potential liability and foreclose, as much as possible, the door to potential claims. Here are some best practices for local governments to consider in achieving this objective:

- Keep designated and primary access routes cleared for safe passage;

- Discourage passage through alternative "shortcuts" by placing barricades, such as sawhorses or fencing;
- Place signs at entrances to alternative "shortcuts" warning the public of the condition of the passage way and that such areas are not maintained;
- For short term, localized hazardous conditions, place barriers or cordon off areas to encourage use along other safer routes;
- Ensure staff holiday scheduling doesn't create unreasonable shortages in personnel, especially during critical winter months;
- Ensure inspection and maintenance policies are current and reflective of achievable practices and most importantly, that such policies are carried out in accordance with the policy;
- Record all accidents, safety concerns and actions taken in response; and
- Notify your insurer at the first instance that a potential liability claim is brought to your attention.

This article is intended for the general information of local governments in British Columbia. If your organization has specific issues or concerns regarding public safety, please consult a legal adviser.

Sonia Sahota and Pam Jefcoat are lawyers with Valkyrie Law Group LLP, a British Columbia law firm focusing on municipal law. Visit their website at www.valkyrielaw.com for contact information.

ORPHEUS
PIPE SURVEY SERVICES LTD.
Christiaan ~ Darrin
Owner/Operator
Telephone: (250) 585-3462
Cell Phone: (250) 954-5663
#401, 4971 Songbird Place
Nanaimo, BC
V9T 6L1
E-mail: info@orpheuspipesurvey.com
Our services include
- Sewer Inspection 3" - 74"
- Locates up to 8 Meters
- Smoke Testing
- Inclination Reports
- DVD Reports / Paperless
- 14 Years Experience
- Sewer Flushing / Cleaning
- Hydro Excavating
- Root Cutting
- Catch Basin Cleaning
- Lift Station Maintenance
www.orpheuspipesurvey.com

CHOICE
SURVEY INSTRUMENTS, EQUIPMENT, & SUPPLIES
Industries Served
• Municipal
• Geomatics
• Construction
• Environmental
• Landscaping
Contact Info:
Ph: 780-489-1776 Toll Free: 1-855-460-1119
100 18108 105 Ave., Edmonton, AB T5S 2T4
Website: www.choicesurvey.ca
Serving: Alberta, BC and Saskatchewan

PUGET SOUND TRUCK SALES

www.pugetsoundtrucks.com

1512 THORNTON AVE SW • Pacific, WA (South of Seattle)

(253) 863-7646

Evenings:

Dennis (253) 606-1748

Email: pugetsoundtrucksales@comcast.net

2006 Ford F550 4x4. Powerstroke diesel, automatic, 17,950# gvwr, 12' flatbed, LOW MILES!! Other flatbeds available.

1997 Volvo, Series 60-430hp, 13 speed, Heavy spec, Vaccon combo jet/vac unit, 10 yard, JD aux. diesel, 1,00 gal. fresh water, HYDRO EXC. Package, 50 gpm @ 3K psi, EX GOVT unit

2007 INTERNATIONAL 7400 4x4 w/ Altec AM855 Material Handler, 60' Working Height, 2-Man Bucket, DT466, Auto, P/S, A/C, Air Brakes, Low Miles and Hours, Ex-Power Co Truck

(9) 2006 Ford F550 4x4, Powerstroke, auto, 2,200# crane, air compressor, Miller welder, (3) lube tanks, grease keg, waste oil system, LOW Miles!

(1) 92 Intl 4900 & (87) Intl S1900, diesel eng & std trans, Fleet fuel trucks, 1,000 gal. non spec diesel & 500 gal DOT spec alum. Gas tank, duel pump systems, Oil & Antifreeze tanks.

(3) 92 International 4700 diesel, automatic, with single compt, pump, meter & hose reel,- Stainless steel tanks, EX GOVT low mileage units.

04 Sterling Actera, w/ high ranger TL50M, 50' material handler, 55' working height, CAT C-7 Automatic, Power Steering, Air Brakes, Air Condition, Low Miles, Excellent Truck. . . . . **CALL**

(2) 2000 Intl S2574, ISM-288hp, jakes, 4x4, 13 speed, Locker diff, dbl frame, tow package, 5 yard dump, LOW MILES- EX GOVT unit.

99 Sterling LT8500, 6x6 ROLLBACK, 3126-330 hp, auto trans, walking beam, locker diffs, 24' Jerrdan rollback, winch, EX GOVT Unit, LOW MILES.

99 Autocar rolloff, 3306-305hp, Auto trans, 66,000# gvwr, LOCKER diffs, T ride susp, Continuous chain rolloff unit, 21' rails, tarp system, EX MUNICIPAL UNIT!!

2008 STERLING LT9513, Amrep Ampro-22 Cable Roll Off, Mercedes Eng, 460 HP, Jake, 10 Spd, TufTrac Susp, 18k # FA, 40k # RA, P/S, A/C, C/C, AM/FM, Low Miles, Excellent Condition

1988 FREIGHTLINER 112 T/A DUMP, SERIES 60 / 350HP, 10SP, P/S, AM/FM, JAKE, 20KFA, 40K REARS, HEND SUSP, EX COUNTY TRUCK.

(3 Available) 2004 FREIGHTLINER M2/112 T/A Dump Truck, CAT-13, 410 HP, Allison Auto, P/S, A/C, C/C, Jake, 16K FA, 40K Rears, Chalmers, 15' Dump, Low Miles! Ex-Power Co. . . . . **.CALL**

(3) 2000 FREIGHTLINER FL80 S/A 5-7 yd Dumps (Plow & Sander Equiped) Cummins 8.3L/275 HP, Allison Auto, P/S, A/C, AM/FM, Retarder, 12k FA, 23k RA, Ex County Trucks.

2001 Sterling Lt7500, 6x6 CREW-CAB, 3126-330 hp, 6 spd, walking beams, 2 spd transfercase, 20' flatbed, EX GOVT Unit LOW MILES!!

2001 FREIGHTLINER FL80 w/ Carmel 200 Hydro-Excavator/Catch Basin Cleaner, 8.3 Cummins, Auto, P/S, Air Brakes, Ex-City Truck, Ony 6,500 Total Miles! Call for Specs.

1991 INT'L 2674 LTA10- 300 HP Cummins turbo diesel, Texoma 330 pressure digger, 15' digging depth, 9 Spd, Walking Beam Susp, 49,948 mi. **.CALL**

NATIONAL ENERGY EQUIPMENT INC.

Diesel | Bio Diesel | Ethanol | DEF

Technology, professional services and Maintenance for transportation fuels and power generation

- Diesel/Bio-Diesel
- Diesel Exhaust Fluid
- Gasoline
- Propane
- Ethanol
- Natural Gas
- Lube Oil

Fleet and operations systems flexible to meet your current and future energy needs

- Storage
- Pumping
- Refueling
- Fuel/Fleet Management
- Environmental Compliance
- Tank Gauging
- Vehicle Conversions
- LED Lighting

Gasoline | Propane | CNG | Oil

VANCOUVER 778.588.7635 | NANAIMO 250.753.4188 | EDMONTON 780.466.2171
CALGARY 403.735.1103 | SASKATOON 306.665.0223 | REGINA 306-721-1030

Toll Free National Directory
1.866.574.5100
www.nee.ca

WINNIPEG 204.633.8569 | MISSISSAUGA 905.670.8863 | MONTRÉAL 514.355.2366
ST. JOHN'S 709.747.0015 | DARTSMOUTH 902.468.7342 | MONCTON 506.861.1013

WESTERN TANK & LINING LTD.

YOUR WATER & WASTEWATER CONTAINMENT
SPECIALISTS SINCE **1985**

Glass Fused to Steel Tanks
Supply & installation of steel-bolted tanks

Epoxy-Coated Tanks
Supply & installation of steel-bolted tanks

PAX® Potable Water Mixers
Improve water quality and increase freeze protection

WTL Repairs
We repair leaky tanks with NSF61-certified HDPE liners

Now Offering Glass Fused to Steel Tanks & Reservoirs by Permastore® • Custom-installed Geomembrane lining systems for steel, concrete, and earthen berm structures • All WTL containment systems meet AWWA, API and NSF specifications

Richmond 604.241.9487 · Calgary 1.800.551.4355

POUNDER EMULSIONS

Western Canada's Premier Supplier of Products for:

- Sealcoating and Micro-surfacing
- Asphalt Rejuvenation and Preservation
- Road Stabilization
- Road Reclamation
- Dust Abatement
- De-icing

65th Anniversary

In Alberta, call Rob Earl (403) 813-4950, Rob.Earl@huskyenergy.com
In BC, call Monty Kallio (250) 320-0127, Monty.Kallio@huskyenergy.com

Smiley Face Bollards Designed in Vancouver Eliminate Many Common Problems

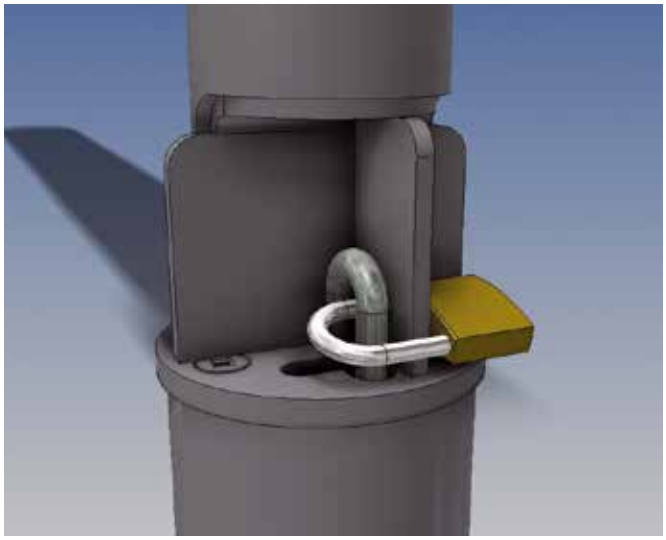

The single lock system.

The double lock system.

The Equipment Services Branch of the City of Vancouver in British Columbia procures and maintains all of the city's vehicles and equipment. As well as caring for the city's fleet of vehicles and equipment, the branch has its own shops with fabricators, machinists, carpenters, body workers and blacksmiths who work on the city vehicles and also provide custom manufacturing for city projects.

The Equipment Services Branch had been approached by the Transportation Division to come up with a design for a removable non-crash-resistant bollard that could be used on roads. Bollards are small structures, usually short vertical posts, which are placed to control or direct traffic. The initial purpose was to aid in closing down roads during special street activities. Eventually the requirements of the removable bollard expanded to include sidewalks and bicycle paths.

Rob Veer, the Equipment Services mechanical technologist, led the project and began by looking at what was commercially available. He found that many of these removable bollards came with flip-up lids, special locks, chains, special hold downs and tripping hazards. All of these styles presented issues for the locations planned and for the people responsible for removing them. He could not allow these to be embedded into roadways or along paths where bicycles and cars would be travelling.

Veer began thinking about another way to design these bollards, eliminating some of the issues he saw in the existing ones. They also needed to be affordable and easy to use. He came up with a pipe-in-pipe design, where the bottom of the post is cut in half longitudinally where it enters the bollard receiver embedded in the ground. The only item that is pulled up from the receiver is a single chain link that falls back down when not in use. When the bollard is pulled out of the receiver, there is no need for a temporary sign, traffic cone, or flip down lid to be locked in place as the "smiley face" cover is already over the receiver. Nothing protrudes past ground level when the post is removed. If the bollard receiver were to ever fill with anything, two bolts could be removed and the lid taken off for cleanout.

Other features were incorporated into the design depending on the purpose and location of the bollard(s). The height was made shorter on bicycle paths to completely avoid most bicycle handlebars. To allow for utility or emergency access, a second style of bollard was designed that incorporated two locks. The Equipment Services fabrication shop now produces two standard removable "smiley face" bollards for Vancouver; a single and double lock design. The presentation drawings and photos have been provided by the City of Vancouver to allow other cities to copy the design if they find it useful. ◗

More graphics showing this technology are shown on the top of the next page.

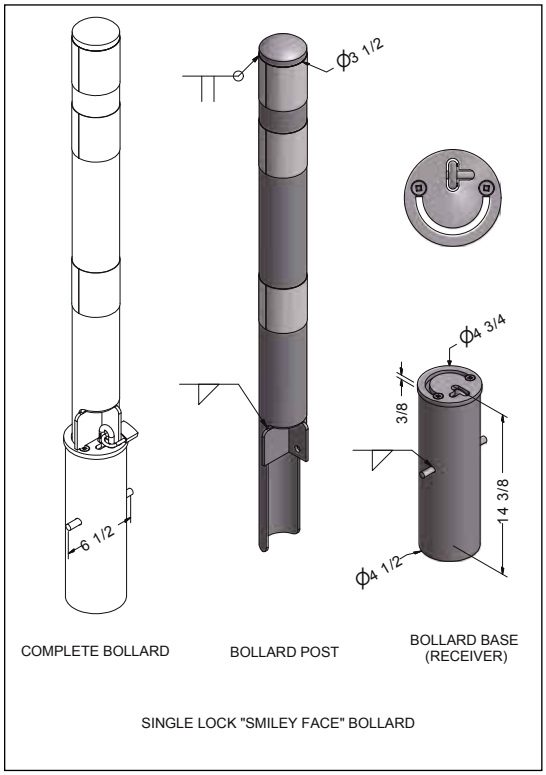

The single lock system.

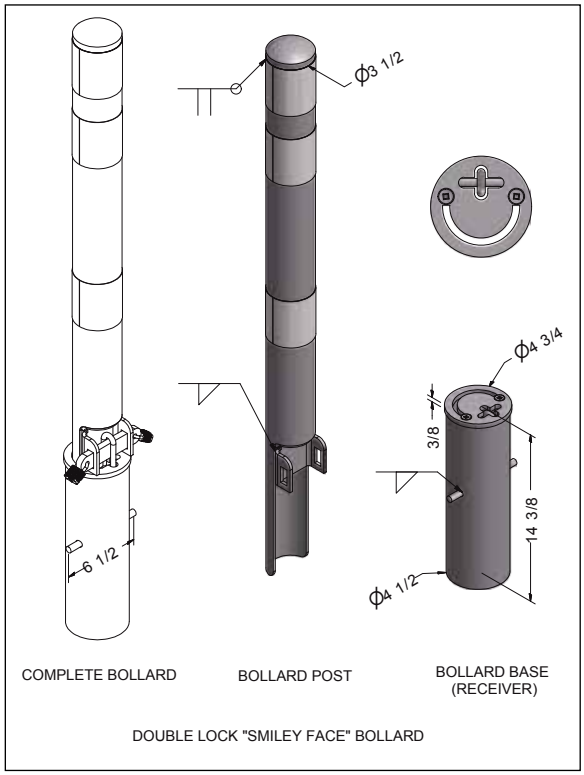

The double lock system.

A bollard with the lock removed.

Superior® Propane

Your total energy solutions partner serving Residential, Industrial and Commercial customers since 1951.

- Propane, Equipment & Services
- Exceptional Service
- HSE & Regulatory Expertise
- 24/7 Emergency Response
- Competitive Pricing

Call Superior Propane today.

1-87SUPERIOR
superiorpropane.com

Proudly Canadian!

Saluting the Best: Projects of the Year

The Public Works Association of British Columbia (PWABC) and the Alberta Public Works Association (APWA) are excited to showcase Project of the Year winners from 2013. Congratulations to all of those individuals and organizations that have demonstrated good public works projects!

PROJECT: ALEXANDRA DISTRICT ENERGY UTILITY LOCATION: THE CITY OF RICHMOND, B.C.

OVERVIEW: The City of Richmond has seen significant growth over the last several decades. This growth continues today and is one of the reasons why Richmond is taking an integrated approach to energy, emissions and broader sustainability management. As part of the city's overarching Sustainability Framework, Richmond Council has adopted both a Strategic Energy Program and a Strategic Climate Change Program. Key targets include:

- 10 per cent reduction in total community-wide energy consumption from 2007 levels by 2020;
- 33 per cent carbon reduction below 2007 levels by 2020; and
- 80 per cent carbon reduction below 2007 levels by 2050.

Richmond recognized early the benefits of district energy systems and has identified district energy as a key strategic initiative for advancing towards more sustainable energy systems that reduce long-term costs, use energy wisely and reduce GHG emissions. In July 2012, the construction of the first district energy system in the City of Richmond was completed, the Alexandra District Energy Utility (ADEU).

IN DETAIL: The ADEU is a sustainable energy system that centralizes energy

Distribution pumps in the energy centre.

Alexandra District Energy Utility opening ceremony.

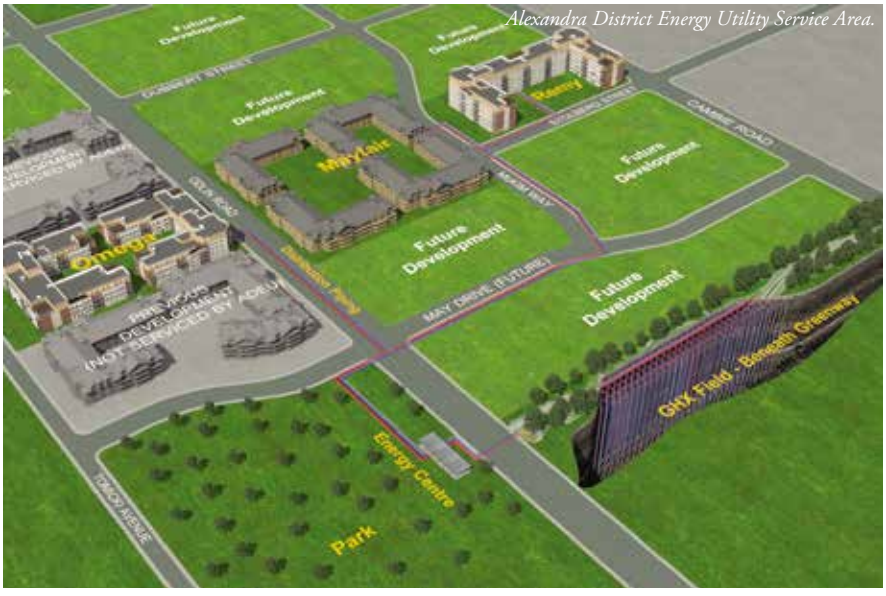

Alexandra District Energy Utility Service Area.

production for heating, cooling and domestic hot water heating for residential and commercial customers in the West Cambie neighbourhood. Construction of the ADEU is being phased to provide "just in time" connections of utility service to match the pace of development and to avoid deploying capital unnecessarily. As the demand for services grows in the ADEU service area, capital expenditures will be offset by additional revenues. The city partnered with the private sector (Oris Geo Energy Ltd.) to design and build the first phase of the ADEU. This creative private/public partnership concept was key to initiating the development of the system.

Today, the ADEU provides renewable energy to over 400 units, which results in the reduction of up to 750 tonnes of greenhouse gas emissions annually. It is estimated that at full build out, the ADEU will result in reduction of up to 6,000 tonnes of greenhouse gas emissions annually, which is equivalent to removing approximately 2,000 cars from the road each year. The ADEU is adaptable to future technologies and sustainable energy sources, such as ground source heat, ground water heat, sewer heat and solar, all serving to reduce the city's dependency on non-renewable energy.

The first phase of the ADEU uses ground source heat pump technology to extract heat (renewable geothermal energy) from the ground via a network of vertical boreholes drilled into the massive geo-exchange field. The field is comprised of 385 vertical closed-loop boreholes, each at 250 feet deep. A water based fluid is pumped through the network and picks up and transfers the heat from the boreholes to the energy centre, housed in a building near the geo-exchange field. The energy travels from the energy centre through the distribution pipes in the street to the heat pumps in the connected buildings. Heat pumps in the buildings elevate the temperatures for heating or rejects heat to the ADEU system for cooling.

As cooling is part of the concept, the geo-exchange field benefits from heat rejection (i.e. heat returned to the field during the cooling season can be partially recovered during the heating season). This results in a smaller field to deliver the same heating capacity.

Integration with the existing and future residential development was also a key consideration of the project. Given the energy plant's visual prominence in a park and along the road, the city engaged a public artist to create artistic wall panels to better showcase the facility and the park in which it is located. The building's interior is visible through large windows, thus providing a view of the infrastructure within. Utilization of the planned neighbourhood greenway corridor as the geothermal field provided the community with multiple benefits: an open green space amenity and an energy source that will bring non-tax based revenue to the community. By carefully coordinating the landscape planting and construction schedule, there was no impact on the quality of the greenway or the timeline for delivery of these amenities.

Sustainable energy systems are a key component of a sustainable community. The construction of the ADEU demonstrates Richmond's commitment to reducing its dependence on non- renewable energy sources and achieving its long term sustainability goals. ◗

PROJECT: MOVABLE WORK ZONE BARRIER PROJECT – TRAFFIC INNOVATION LOCATION: ALBERTA TRANSPORTATION 10983 HWY. 201-08 FROM JCT. OF HWY. 1 TO JCT. OF HWY. 2, ADDITION OF THIRD LANE IN THE MEDIAN, BOTH DIRECTIONS; STONEY TRAIL NW - CALGARY, AB MOVING WORK ZONE OF 18 KILOMETRES IN EACH DIRECTION

OVERVIEW: The Vulcan Barrier is a movable work zone barrier that protected the work area and workers, while allowing traffic to flow as usual, during a project this past summer. This project involved the removal of materials and the establishment of a third travel lane over an 18 kilometre section of Highway 201 in both directions, between the Crowchild Trail on the west and the Deerfoot on the east, for a total of 36 kilometres.

The use of over three kilometres of portable rolling steel Vulcan Barrier provided a safe work zone for workers and

The lightweight and stackable design allows up to 150 meters to be transported on one truck, offering a huge transport savings when compared to traditional concrete barriers.

147m (36, 4.1m sections) of Vulcan Barrier stack on one truck and can be installed in less than half an hour.

Crank-down caster wheels provide easy installation and mobility in temporary construction work zones.

equipment, while protecting the highway traffic and maintaining a smooth traffic flow passing the work area. Thirty-six sections of the 4.1 metre barrier units can be carried on a standard flatbed trailer, providing over 147 metres of work zone protection that can be unloaded and placed in less than 30 minutes.

IN DETAIL: The Vulcan Barrier, from Energy Absorption Systems, is a portable steel longitudinal barrier that meets NCHRP 350 TL-3 test requirements as a longitudinal redirecting barrier. It is available in effective lengths of four metres, eight metres and 12 metres. Vulcan Barrier uses a vertical steel pivot pin to interlink each module, allowing the system to follow curves of up to six degrees per four meter segment.

The Vulcan Barrier can be deployed as a free standing system and is designed to be used with a variety of end terminal options, such as the ACZ-350 End Treatment or QuadGuard® CZ System. Optional casters are installed to simplify deployment and movement. The lightweight and stackable design allows up to 150 metres to be transported on one truck, offering a huge transport savings when compared to traditional concrete barriers. The Vulcan Barrier can also be used as a Test Level 4 median gate to allow traffic to be diverted for any reason.

The Vulcan Barrier 4.1 metre sections lock together with solid pins to form a protective barrier. As the work zone moves along the highway, the wheel sections can be lowered to allow the units to be towed ahead, moving the protective barrier as the project moves ahead. On this project in particular, once the eastbound project reached the Deerfoot Trail, the units were transferred to the westbound lanes, and followed the same process westbound to the start of the project.

Upon completion of the project, Hwy. 201 (Stoney Trial) from Deerfoot to the Crowchild Trail was three lanes in each direction, and with the addition of projects between the Crowchild and Hwy. 1, the full section will be three lanes in each direction. ◗

PROJECT: East Balzac Potable Water Supply System LOCATION: Rocky View County, AB

OVERVIEW: This project involved innovative partnering by the county to provide a reliable water supply in a short time frame. The county showed that a public works organization could work with local partners to "get it done" and meet the strict timelines of a large private development. CrossIron Mills Mall remains a significant economic generator in Rocky View County, and East Balzac has attracted numerous additional developments.

The county retained MPE Engineering Ltd. to assist in implementing a new potable water system in the East Balzac area. The process included accelerated planning and design, with the county, MPE and local partners working successfully.

Project construction included construction of a 3.9 MLD DAF/UV water plant, 750 m^3 buried concrete reservoir, distribution pumping capacity of 250 hp, a 480,000 m^3 raw water reservoir, a 19 kilometre transmission main (400 millimetre), a local pump station (500 hp) and reservoir (6,300 m^3), and a 1.5 kilometre feeder main (600 mm). The treatment process included an aeration system (raw water), Dissolved Air Flotation (DAF) technology, Ultraviolet Disinfection, and backwash water recycling. Programmable Logic Controller (PLC) and Supervisory Control and Data Acquisition (SCADA) software programming was installed for remote monitoring of the entire water supply system.

The system meets the strict Alberta Environment and Sustainable Resource Development (ESRD) regulatory requirements for surface water treatment.

IN DETAIL: As part of Rocky View County's economic development initiative, development of East Balzac along the Queen Elizabeth Highway (2) corridor became a priority. Early on, the county recognized that a lack of potable water supply represented a major impediment to developing retail commercial, light industrial and agribusiness in the East Balzac area.

In February 2009, the county retained MPE Engineering Ltd. to lead the project design and implementation of an accelerated

The Balzac Pump Station and buried potable water reservoir.

The interior mechanical at the Conrich Pump Station and buried potable reservoir.

The Graham Reservoir.

project schedule for a $36 million public water system. The county had never before completed a potable water project of the scale and complexity needed to serve East Balzac. A private consortium had started the project but following the financial crisis of 2008, the county decided it would have to complete the project on its own to realize success.

CrossIron Mills Mall represented the first major anchor in the East Balzac development node, and to meet the August 2009 grand opening schedule, both potable water service and fire protection was imperative. A number of possible options and potable water sources were assessed by MPE in early 2009, with the county deciding on a brand new treatment facility 20 kilometres east of Balzac, near Kathyrn.

To successfully complete a project of this magnitude in a short timeframe, the county and MPE sought and successfully obtained the cooperation of a number of local organizations. A local water co-op provided interim potable water during the construction process, and transferred a local pump station and reservoir to county control.

A local irrigation district provided a water diversion license for 6,083 m^3/d, raw water delivery from the Bow River, and assisted the county in acquiring a 57 acre site for the treatment plant and raw water reservoir near the Graham Reservoir. None of this was easy considering the diversion license moratorium imposed by Alberta Environment in the South Saskatchewan Basin since 2006, which includes the Bow River. Contractors were also engaged in short order to implement the main components of the work.

To provide water to East Balzac, five critical components were planned:

1. 480,000 m^3 raw water reservoir (the "lake") and canal intake;
2. 3,900 m^3/day Stage 1 DAF water treatment plant with UV disinfection;
3. 19 kilometre x 400 millimetre dia treated water transmission main to East Balzac;
4. 6,300 m^3 expanded pump station and reservoir in East Balzac; and
5. 1.5 kilometre x 600 millimetre dia treated water feeder main to East Balzac.

The treatment site selected in the heart of east Rocky View not only provides for a ready supply of high quality Bow River raw water from the irrigation canal, the site also is ideal for expansion of regional service to other communities in the county.

At the site, the clay-lined raw water storage reservoirs provides a seven month winter water supply, given the irrigation system only delivers water during the summer.

The state-of-the-art Dissolved Air Flotation water treatment plant was sited to allow for tripling of the plant capacity and footprint. Backwash water is recycled. A 750 KW standby generator ensures continuous operation of all facilities during a power outage. Full SCADA allows trending, reporting and full remote operation of the plant. Reports are e-filed with the regulator.

JSF technologies

See more of our solar products online!

JSF Technologies
www.jsftech.com

1.800.990.2454
1.250.544.1640

The transmission main route to East Balzac was selected within a local road allowance to minimize disturbance to local ratepayers and to minimize environmental impacts to adjacent lands. The main was sized to carry the entire diversion license capacity, or more than double the Stage 1 needs.

To allow for fire protection during mall construction, priority was given to the expansion of the pump station and reservoir in East Balzac as well as the large diameter feeder main. In the pump station, large fire capacity pumps and additional storage was added to allow for a 15,000 l/min flow for 3.5 hours.

Both the pump station and feeder main were operational in summer 2009. CrossIron Mills Mall had a very successful Grand Opening on August 19, 2009, with over 250,000 people visiting the centre during the five day celebration.

By the end of 2010, the raw water reservoir was near full and the treatment plant began water production. The interim potable water supply to East Balzac was shut down as the new facilities ramped up production.

The project came in under the $36 million budget, and was partially funded thanks to an $8 million grant from Alberta Agriculture and Rural Development. The remaining project cost is being recouped through private developers in the form of off-site development levies.

To meet the economic development goals of the county, the project was planned and designed to allow for regional expansion. Already the system is proving its worth, with service extended in late 2012 to Conrich and a new CN Intermodal Facility.

The East Balzac Water Project was a public works success. It involved collaboration and innovative thinking from county public works staff and their consultants to realize the vision set forth by county council. Cooperation from project partners, local ratepayers and regulators was invaluable. The facility is a positive legacy that will allow the county to attract future business to the area, and it remains an enormous asset to the community as a whole. Already national retailers have established large facilities in East Balzac.

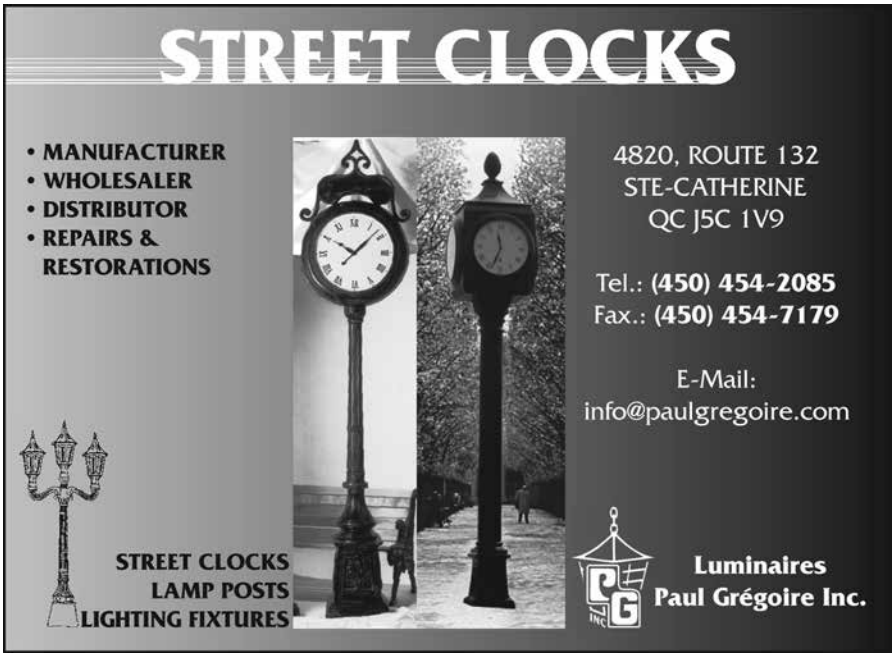

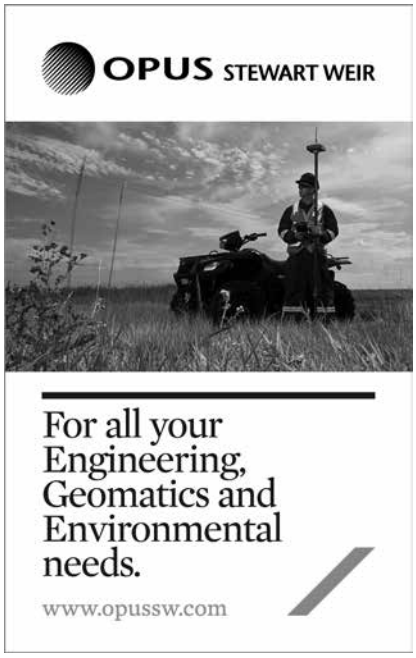

A plaque commemorating this project as Alberta's First Design-Build Water Pipeline & Reservoir was presented to members of the Design Build Team at the grand opening.

The pump room in the new Wandering River Reservoir.

The FPVC pipe was fused above ground in preparation for drilling.

PROJECT OF THE YEAR: WANDERING RIVER PIPELINE/ RESERVOIR DESIGN BUILD LOCATION: ATHABASCA COUNTY

OVERVIEW: Graham Construction, Stantec Consulting and M. Pidherney's Trucking worked closely with Athabasca County to provide an innovative project to bring safe and reliable drinking water to rural Albertans. This unique design build project included 88 kilometres of regional waterline and a new municipal reservoir in Wandering River.

This project ensures safe water is reliably delivered directly to 70 rural residences and two communities. As part of this project, the existing regional waterline from Athabasca to Boyle was extended to Grassland in 2011. A further extension from Grassland to Wandering River was complete in the summer of 2012.

IN DETAIL: The Wandering River regional waterline project is unique for various reasons. It is the first regional water project in Alberta completed under a design

Alberta Highway Services Ltd.

Alberta Highway Services Ltd., (AHSL) is a highway, roadway, and bridge maintenance company based out of Edmonton, Alberta. The company is comprised of three divisions:

- Contract Maintenance Areas (CMAs)
- Bridge Maintenance
- Private Work/Construction

Alberta Highway Services Ltd., provides the province with unparalleled highway and highway-related maintenance and repair such as:

- Guardrail supply, installation and repair
- Sign supply, installation and repair
- Spray patch road-repair
- Snow plowing
- Bridge Repair and Maintenance

#200 11010 178 Street

Edmonton, Alberta T5S 1R7

P: 780-701-8668

F: 780-443-2918

www.ahsl.ca

build delivery model. The selected method of installation was horizontal directional drilling (HDD) for nearly the entire length of the system. In addition, the system consists primarily of fusible polyvinyl chloride pipe (FPVC).The application of FPVC for this project represents the largest project by length of FPVC directionally drilled as well as the largest project by length of FPVC installed to date in Canada.

The design build delivery model was proposed by the design build team and adopted by the owner in order to facilitate condensed design, reduced environmental approvals, and disturbance to the environment and construction timelines. This approach allowed the owner to reduce the overall delivery timelines of the project by as much as 50 per cent. As such, this project was evaluated on overall value and not direct costs alone. This required proponents to take an innovative approach to the project.

Horizontal directional drilling was initially selected as the choice method of installation for this project due to the tight timelines. Drilling greatly reduces potential environmental impacts through minimum disturbance during construction activities, and therefore is exempt from the requirement to obtain an approval under the *Environmental Protection and Enhancement Act* (EPEA). This exemption allowed for a reduction in the overall project timeline of up to six months.

While scheduling impacts was the driving factor in the selection of HDD installation, it was also recognized that this method added value to the project in other areas. HDD reduced disturbed lands by approximately 90 per cent. This minimized top soil salvage, sub soil excavation, add-mixing of soils, re-vegetation, erosion and crop damage, while preserving the natural habitat for wildlife. In cultivated areas it minimized crop damage and reclamation required by private land owners. As a large portion of the waterline was installed within county road rights-of way, this approach also minimized disruption to motorists and limited the need for private lands.

The reduced disturbance also improved community relations. HDD minimized inconvenience to the public and as a result there were few construction related complaints from community members. In fact, as the project was nearing completion, the owner shared with the design build team the story of a local resident who was curious as to when construction was scheduled to commence. Inconvenience to the public had been minimized to such a degree that several local residents were not even aware of the construction activities in their community.

The selection of FPVC pipe was based on the hydraulics of the system. High density polyethylene (HDPE) pipe is used more commonly in HDD installations. However, in this case, the larger internal diameter of PVC pipe allowed the use of 150 millimetre diameter pipe, while the greater wall thickness of HDPE pipe would have required the use of 200 millimetre diameter pipe. FPVC pipe was suitable for HDD installation and provided the hydraulics required for the system while offering a cost saving to the client by downsizing the pipe diameter.

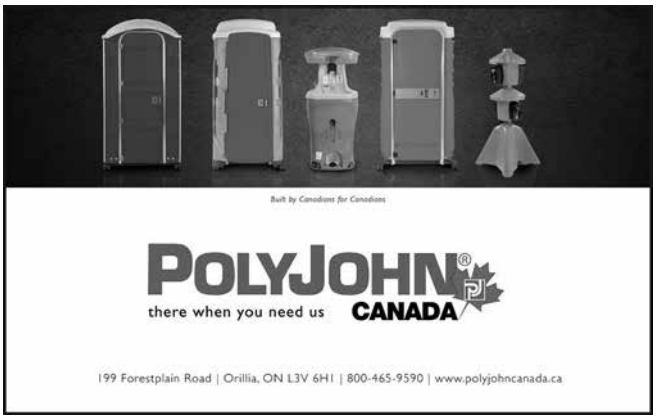

PRECISION SCALE™
MEASUREMENT CANADA ACCREDITED
ISO 9001 : 2008 Registered QMS
COR Safety Certification
Winter Maintenance, Calibration and Repair
10% off Promotion on Service Work
(New Clients) until Feb 28, 2014
Promotion Code: PRC1500

Edmonton / Calgary / Grande Prairie
Call 1-800-831-5657 for information
www.precisionscale.com
CELEBRATING 50 YEARS PRECISION SCALE

In addition to the pipeline, a system flushing program was developed and implemented to replace the water in all of the municipalities serviced by the Aspen Regional Water Services Commission (ARWSC). This program affected five communities, including the Town of Athabasca and was implemented to facilitate a conversion of the current water supply system from chlorine to chloramine disinfection. During the design and construction of this project ARWSC water treatment plant was undergoing modifications to switch the system over to chloraminated water as chloramine residuals do not break down as quickly and therefor provide disinfection over a greater time period. This was of particular importance to this system as the extensive pipeline length and lower flows would not facilitate a high turnover in water.

It should be noted that this project also includes the creation of a new reservoir, pumping station and truck fill at Wandering River, the retrofit of an existing reservoir and pumping station at Grassland and 70 residential service vaults. The Wandering River Reservoir has a storage volume of 555m3 (122,000 Igal) and a system pumping capacity of 5L/s (66 Igpm).

The project was completed on budget and ahead of schedule. This project will supply clean and safe drinking water to the communities of Grassland, Wandering River and the rural residents in between for many years to come.

ALLEN SAYS:
It's a commercial opportunity!

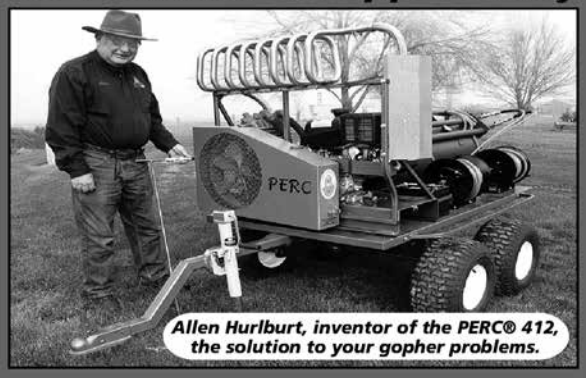

Allen Hurlburt, inventor of the PERC® 412, the solution to your gopher problems.

ASK ABOUT THE R.O.I ON YOUR P.E.R.C.!
Provide your neighbors with valuable rodent control service.

The first and only PERC® (Pressurized Exhaust Rodent Controller) can substantially reduce rodent populations in a single treatment.

NO POISON BAIT! NO EXPLOSIONS!

(855) 667-5181
www.hmgophercontrol.com
H&M GOPHER® CONTROL
Manufacturing & Sales
spec-2/#5

Poly-Mor Canada Inc.
NATIONAL COMPANY
Serving the Residential, Industrial, Institutional & Municipal Market

Harnessing the Power of Polymers

- ✓ We lift, align, under-pin & stabilize settled slab-on-grade structures
- ✓ We densify and stabilize weak base soils to increase bearing capacity
- ✓ We fill voided areas such as sink-holes, wash-outs, etc.
- ✓ Infrastructure repair

Team Poly-Mor
Poly-Mor
www.poly-mor.ca
1 866 877 3835
ALBERTA • ONTARIO • BRITISH COLUMBIA • MANITOBA • SASKATCHEWAN • YUKON • NORTHWEST TERRITORIES • NUNAVUT

ONSPOT
Automatic Tire Chains
SINCE 1977
Allows operator to engage/disengage tire chains without stopping via dashboard switch. Increase vehicle safety and productivity.
Provides traction in forward or reverse for: 1/2 Ton to Class 8 Vehicles

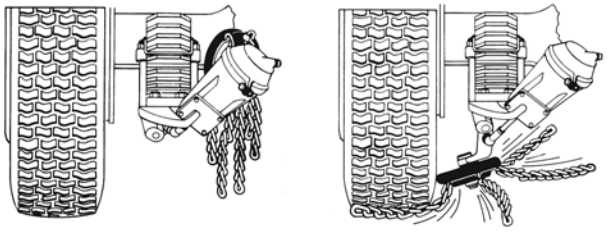
Resting Position
Working Position

ULC Approved
FACTORY OPTION OR RETROFIT
School Buses • Fire Trucks
Ambulances • Utility Trucks
Plow Trucks • Tractor Trailers
For more information call
1-800-766-7768
onspot@onspot.com
www.onspot.com

Escape the ordinary
Upgrade to Sheraton CLUB for just $40 and experience upgraded room amenities, complimentary hot breakfast, evening hors d'oeuvers and evening cocktails.
Find out more at sheraton.com or call 800 662 7197
spg. Starwood Preferred Guest
©2013 Starwood Hotels & Resorts Worldwide, Inc. All Rights Reserved. Preferred Guest, SPG, Sheraton and their logos are the trademarks of Starwood Hotels & Resorts Worldwide, Inc., or its affiliates. For full terms and conditions, visit sheraton.com/reddeer

Alberta Public Works Association Lends Assistance to Southern Alberta Flood Relief

By Patty Podoborozny, CET, PWSIII, Operations Foreman, Public Works Strathcona County, Past President, Alberta Public Works Association

In the days leading up to June 20, 2013, Alberta experienced heavy rainfall that triggered catastrophic flooding described by the provincial government as the worst in Alberta's history. Areas along the Bow, Elbow, Highwood, Red Deer, Sheep, Little Bow and South Saskatchewan rivers, and their tributaries, were particularly affected.

A total of 32 states of local emergency were declared and 28 emergency operations centres were activated as water levels rose and numerous communities were placed under evacuation orders. Four people were confirmed dead as a direct result of the flooding and over 100,000 people were displaced throughout the region. Initial estimates expect the total damage estimates to exceed $5 billion. Receding waters gave way to a mammoth cleanup of affected areas, aided by a spontaneous volunteer campaign in which many home owners were assisted by complete strangers.

South of Calgary, the town of High River was evacuated after flooding of the Highwood River caused water to rise over the top of vehicles in the town's main streets and necessitated the rescue of over 150 people from the rooftops of their homes. All 13,000 residents of High River were ordered to evacuate on June 20, and the community was largely abandoned within three days as the town suffered what local officials called "unprecedented" damage.

The initial flood response in High River was handled by emergency services and military personnel. The Emergency Operations Center (EOC) was activated and Incident Command practices were initiated. The recovery began as soon as the town was evacuated and residents were safe.

As in all emergencies, public works plays a critical role in both response and throughout the process of recovery. The revitalization of roads, sewers, water systems and other public works infrastructure are essential to recovery. This is the work of our municipal public works departments and the work in which Canadian

Photos on this page courtesy of City of Calgary.

Public Works Association and our over 2,000 members in Canada proudly represent. This natural disaster was a stark reminder of how important public works and infrastructure systems are to the day-to-day survival of people and pledged to support public works officials and other first responders to provide information and coordinate relief in an effective, unified manner.

The public works community in Alberta is no stranger to mutual aid during emergency times. The Alberta Public Works Association has assisted with the coordination of the public works volunteers throughout the province in the past. The EOC contacted me, as President of the Alberta Public Works Association on June 28, 2013, to assist with the procurement of resources for the recovery efforts.

It was going to be difficult to fill the request for resources as it was the Friday afternoon of the first long weekend of summer. I downloaded our chapter membership list and started calling. Within 12 hours of receiving the call for help from the EOC our association had assisted with recovery efforts by deploying 14 municipalities to High River. The municipalities sent equipment and staff based on the needs of the EOC. The municipalities had committed to be there as long as they were needed to assist with the recovery efforts.

The requests for resources also included supervisory positions. The Alberta Chapter of the APWA placed Darwin Durnie, President, Canadian Public Works Association in the EOC to replace departing military personnel. Darwin remained there for weeks and played a vital role in the recovery program of High River.

The Alberta Chapter also sent two of its executive, Dean Berrecloth and Dave Henning, to assist with the field supervision of work crews. These three gentlemen represented our chapter with a high degree of professionalism and enthusiasm throughout their time in High River.

The Alberta Chapter was founded to improve the quality of public works products and services to the citizens of Alberta. Public works professionals understand that education is a lifelong activity, and that a person's peers are often the best source for information, practical advice and personal support. APWA members can be found throughout the public works community in our beautiful province. They plan, build, manage and maintain billions of dollars worth of public infrastructure, and do it well.

On this page: Members of the public works community lend a hand.

Often, it is at the chapter level where members make personal connections, network and can take advantage of local educational programs. Those personal connections developed through the APWA had proven to be the key to mutual aid throughout this past summer to High River. The municipalities that assisted in the flooding expressed how the experience had changed their own perspectives on mutual aid.

Our chapter had developed an Emergency Management Database of municipalities that would offer assistance and expertise in an emergency. This was an initiative that was a direct result of our assistance in the Slave Lake fire in 2011, which forced the evacuation of 7,000 residents. At the time it was considered the second most costly disaster in Canadian history, behind the ice storm that hit Quebec and Ontario in 1998.

The database was used to email municipalities throughout the province with daily updates on recovery efforts and requests for assistance. As the recovery process expanded, there were more requests for assistance to provincial and federal agencies. Municipalities were getting requests from multiple agencies for assistance and were unsure of whom to direct their inquiries to. The Alberta Chapter teamed up with the Municipal Affairs office and decided that we would look for equipment resources and they would focus on administrative resources. This partnership proved quite effective and resulted in more emergency management partnerships that facilitate mutual aid during emergent times. Mutual aid is an agreement among emergency responders to lend assistance across jurisdictional boundaries. Alberta, with its abundance of natural resources and industry, is no stranger to risk management. It is also no stranger to disaster, which has included floods, tornados, wild fires, pipeline breaches, train derailments and transportation incidents involving hazardous materials release.

It was an emotional summer for all Albertans; I was deeply moved by the support given to each other during the displacement of over 100,000 people. Albertans will never forget the summer of 2013 but our communities will be come back will be different, but we are closer than ever before. The dedication of public works professionals during this event will never be forgotten and they will be remembered as "unsung heroes" for years to come.

ACOUSTIC TREATMENTS
Wallworks, Acoustic, Architectural, Products, Inc. 6

ANIMAL CONTROL SERVICES
Halford Hide & Leather 14

ANTI CORROSION SYSTEMS
Denso North America Inc. 7

ASPHALT ADDITIVES SUPPLIER
Akzonobel Canada Inc. 3

ASPHALT AND RECYCLING EQUIPMENT MANUFACTURER
KM International ..... IBC

ASPHALT AND ROAD SPECIALISTS
Western Asphalt Products 30

ASPHALT INFRARED REPAIR SOLUTIONS
Smart Fix Infrared Technology Leasing & Rentals 4

ASPHALT PAVING MIXTURES
Pounder Emulsions 35

AUTOMATIC LUBRICATION
Beka Lube Products Inc. 50

AUTOMATIC TIRE CHAINS
Onspot 47

BLACKTOP REPAIR PRODUCT SPECIALISTS
W.R. Meadows of Western Canada 14

BUILDING SCIENCE CONSULTING AND ENGINEERING
Sameng Inc. 16

CANADA'S GRADER PEOPLE
Jade Equipment 30

CONSTRUCTION MATERIALS
Brock White 20

CONSTRUCTION TECHNOLOGY PRODUCTS
Mountainview Systems ..... IFC

COST EFFECTIVE ECOSYSTEM
Brinkman & Associates Reforestation Ltd 17

CUSTOM ROCK PRODUCTS
Canadian Rock Signs 50

DEGREMONT TECHNOLOGIES
Degremont Technologies 21

ENGINEERING CONSTRUCTION MAINTENANCE FOR TRAFFIC AND STREET LIGHTING
Can-Traffic Services 33

EQUIPMENT DEALER
Finning Canada 12

EQUIPMENT, TOOLS AND ATTACHMENTS
RockHound Attachments 7

EXPERIENCED ROAD BUILDERS AND HEAVY CONSTRUCTORS
B.C. Road Builders & Heavy Construction Association 7

FLOOD PREVENTION/PROTECTION
Global Flood Solutions 40

FUEL AND FLUID STORAGE HANDLING
Western Oil Services Ltd. 29

GEOMETRICS, ENGINEERING, ENVIRONMENTAL PROFESSIONALS
Opus Stewart Weir 43

HIGHWAY, ROADWAY AND BRIDGE MAINTENANCE
Alberta Highway Services 44

INDUSTRIAL SCALE COMPANY
Precision Scale 46

INFRASTRUCTURE PROTECTION
Fibrwrap 45

LIGHTING
Greentop Lighting 43

MANUFACTURER OF PVC (PVCO) PRESSURE PIPE
IPEX ..... OBC

MUNICIPAL EQUIPMENT
Cubex Ltd 25
Puget Sound Truck Sales 34

PIPE SURVEYING SERVICES
Orpheus Pipe Survey 33

PORTABLE RESTROOMS/OUTDOOR SANITATION
Poly John Canada Inc. 46

PREMIER CONFERENCE HOTELS, RED DEER
Sheraton Red Deer 47

PRESSURIZED EXHAUST RODENT CONTROLLER
PERC / H&M Gopher Control 47

PROPANE EQUIPMENT, APPLIANCES, INSTALLATION SERVICE
Superior Propane 37

RECYCLING PROGRAMS
Alberta Recycling Management Authority 46

ROTARY LIFTS
Keller Equipment Supply Ltd. 14

RUST AND CORROSION SPECIALISTS
Rhomar Industries 23

SLAB LIFTING AND SOIL STABILIZATION
Poly-Mor Canada 47

SNOW AND ROAD EQUIPMENT SUPPLIERS
Industrial Machine Inc. 11

SNOW/ICE REMOVAL EQUIPMENT CONTROLS AND REPORTING
Cirus Controls 11

SOLAR TRAFFIC SOLUTIONS
JSF Technologies 42

SPEED DISPLAY TECHNOLOGY
RU2 Systems Inc. 29

SURVEYING AND LOCATING SUPPLIES CONSTRUCTION SUPPLIES, MARKING PAINT AND SUPPLIES
Choice Survey & Construction Supplies 33

THE ULTIMATE SANDBAGGER
Sandmaster Inc. Canada 10

TOOL SOLUTIONS
Integrated Tool Solutions 17

TOWN CLOCKS
Luminaires Paul Grégoire Inc. 43

TRAFFIC CONTROL PRODUCTS
Plastic Safety Systems Inc. 22

TRANSPORTATION ENERGY NEEDS PROVIDERS
National Energy Equipment 35

WATER AND WASTEWATER CONTAINMENT SPECIALISTS
Western Tank & Lining Ltd. 35

WATER AND WASTEWATER TRANSPORT AND TREATMENT PRODUCTS
Xylem Inc. 31

WHOLESALE DISTRIBUTOR PLUMBING HEATING AND WATERWORKS
Frontier Waterworks & Pump Supply 8

Beka-Lube
PRODUCTS INC.
LUBRICATION. PROTECTION. SERVICES.
BEKA-MAX®
Beka Max Automatic Lubrication Systems for all your Road and Off Road Equipment - "The Smart Way to Protect Your Assets."
Beka-Lube Products Inc. is looking for Dealers. Please call Jacquie at the Toll-Free # for more information.
2830 Argentia Rd. Unit 9, Mississauga ON L5N 8G4
1-888-862-7461 • www.beka-lube.com • info@beka-lube.com

ROCK SIGNS .ca
Since 1988
Stone and Granite Park, Trail & Entrance Signs
Donated Memorial Bench Programs
& Much, Much More...
rocksigns.ca
info@rocksigns.ca
1-800-463-7446
Bought for Beauty, Bought for Life

KM INTERNATIONAL
ASPHALT MAINTENANCE EQUIPMENT

The Choice of Asphalt Professionals Worldwide

KM 8000T

- No High Change Parts
- Reliable Combustion Chamber
- Less than $100/yr to Maintain

Compare Us to Brand "F"
The Upfront Cost is
Worth the Quality!
We have the best
Hot Box Reclaimer.

You get what you pay for!

It's our Distributors that make it happen.

Saunders Equipment | Industrial Machine Inc.

Johnstone Brothers | Canadian General Trade

The Choice of Asphalt Professionals Worldwide

T-2 Asphalt Recycler

- When you are serious about RECYCLING asphalt, millings, and RAP!
- Make better asphalt year round
- 2600 lbs. every 20 minutes @ $25.00 per ton

800-492-1757 • 810-688-1234 • www.kminb.com

SHOWN ACTUAL SIZE

THE BIGGEST MOLDED C907 PRESSURE FITTING IN THE WORLD CAN'T FIT ON THIS PAGE.

Introducing 10" & 12" molded C907 pressure fittings – available only from IPEX.

As one of the first to pioneer PVC pipe and fittings in North America our commitment to innovation has led IPEX to introduce many industry firsts – including the largest sizes of PVC pressure pipe and fittings available anywhere in the world. Today, we are proud to offer the industry's first 10" and 12" C907 molded pressure fittings.

To learn more, call us or visit www.ipexinc.com

IPEX BLUE BRUTE® FITTINGS

Products manufactured by IPEX Inc.

Toll Free: 1-866-473-9462